RECEIVED
MAY 21 2019
CALN TWP
RTKO

pennsylvania
OFFICE OF OPEN RECORDS

STANDARD RIGHT-TO-KNOW REQUEST FORM

DATE REQUESTED: 05/20/2019

REQUEST SUBMITTED BY: ☑ E-MAIL ☐ U.S. MAIL ☐ FAX ☐ IN-PERSON

REQUEST SUBMITTED TO (Agency name & address): Del Val Realty & Property Management
81 Lancaster Ave, Ste 218, Malvern, PA 19355

NAME OF REQUESTER : Julia Porter

STREET ADDRESS: 81 Lancaster Ave, Ste 218

CITY/STATE/COUNTY/ZIP(Required): Malvern, PA 19355

TELEPHONE (Optional): _____ **EMAIL (optional):** _____

RECORDS REQUESTED: **Provide as much specific detail as possible so the agency can identify the information.*
Please use additional sheets if necessary

All permits obtained from 2012 to current for the following streets:

Tyning Lane
Alydar Road

patios
decks + fences

DO YOU WANT COPIES? ☑ YES ☐ NO
DO YOU WANT TO INSPECT THE RECORDS? ☑ YES ☐ NO
DO YOU WANT CERTIFIED COPIES OF RECORDS? ☐ YES ☑ NO
DO YOU WANT TO BE NOTIFIED IN ADVANCE IF THE COST EXCEEDS $100? ☑ YES ☐ NO

**** PLEASE NOTE: RETAIN A COPY OF THIS REQUEST FOR YOUR FILES ****
**** IT IS A REQUIRED DOCUMENT IF YOU WOULD NEED TO FILE AN APPEAL ****

FOR AGENCY USE ONLY

OPEN-RECORDS OFFICER: A Swan

☐ I have provided notice to appropriate third parties and given them an opportunity to object to this request

DATE RECEIVED BY THE AGENCY: 5/21/19

AGENCY FIVE (5) BUSINESS DAY RESPONSE DUE: 5/28/19

***Public bodies may fill anonymous verbal or written requests. If the requestor wishes to pursue the relief and remedies provided for in this Act, the request must be in writing. (Section 702.) Written requests need not include an explanation why information is sought or the intended use of the information unless otherwise required by law. (Section 703.)*

TOWNSHIP OF CALN
253 MUNICIPAL DR
THORNDALE, PA. 19372
610-384-0600

CERTIFICATE OF OCCUPANCY

Building Permit No.: 14-00653

Zoning District: R-3

Permission is hereby given:

WHEELER,JAMES C II
(owner of use)

WHELLER JAMES
owner (new)

WHEELER,JAMES C II
contractor

Use Type: R RESIDENTIAL

(Lot & Development)

REMARKS

At: 3245 TYNING LA

Description: RESIDENTIAL ACCESSORY STRUCTURE - PATIO

10/13/14
Building Inspector DATE

Andrew F. Reczek
Zoning Officer/Building Code Official DATE

APPROVED AS TO COMPLIANCE
WITH ZONING ORDINANCE.

SCANNED
OCT 13 2014
ELECTRONICALLY FILED

CALN TOWNSHIP

DEPARTMENT OF CODE ENFORCEMENT

Andrew F. Reczek, Director of Code Enforcement
Stephen L. Miller, Code Official / Fire Marshal
Raymond Stackhouse, Code Official / Deputy Fire Marshal
Joseph Arvay, Property Maintenance / Housing Inspector

www.calntownship.org

Phone: 610-384-0600 Ext. 145 Fax: 610-384-0689
Email: codes@calntownship.org
253 Municipal Drive, P.O. Box 72149 Thorndale, Pa. 19372-0149

MISCELLANEOUS INSPECTION REPORT

DATE: 10/7/14 sm

LOCATION: 3245 Tyning Lane

TYPE OF INSPECTION: Final Patio

Patio discovered at time of U&O, No record of permit

Permit submitted and approved

Side yard setbacks ok / Rear Year 20'+ as shown by grass mowing lines

Less than 4 risers to landing at slider door.

OK for U&O, also ok to clear conditional U&O of any conditions

TOWNSHIP OF CALN

PERMIT

Permit No: 14-00653

Date Issued: 09/22/14

Location of Work: 3245 TYNING LA

Type of Work: PAVER PATIO

SEE ATTACED PERMIT REVIEW COMMENTS

Owner: WHEELER,JAMES C II

Contractor: WHEELER,JAMES C II

Parcel #: 39-4-760.0

Andrew F. Reczek

ZONING DIRECTOR

THIS PLACARD MUST BE POSTED IN A CONSPICUOUS PLACE ON THE PREMISES, EASILY VISIBLE FROM THE PRINCIPAL STREET, WELL SECURED IF EXPOSED TO THE WEATHER, DURING THE ENTIRE CONSTRUCTION TIME.

WORK MUST BE STARTEDWITHIN 6 MONTHS FROM DATE OF ISSUE

CALN TOWNSHIP
DEPARTMENT OF CODE ENFORCEMENT
Andrew F. Reczek, Director of Code Enforcement
Stephen L. Miller, Code Official / Fire Marshal
Raymond Stackhouse, Code Official / Deputy Fire Marshal
Joseph Arvay, Code Official / Housing Inspector
610.384.0600 fax: 610.384.0689 Email: areczek@calntownship.org
253 Municipal Drive, P.O. Box 72149 Thorndale, Pa 19372-0149
www.calntownship.org

September 22, 2014

Napoleon Mariano
3245 Tyning Lane
Downingtown, PA 19335

PERMIT REVIEW: Zoning Permit / Accessory Patio **(648 square foot)**

1. All work shall comply with the R-3 Zoning District and the Cluster Development requirements found in Section 155-56.

2. A minimum ten (10) foot side yard and twenty (20) foot rear yard setback shall be maintained in accordance with Section 155-56 D and 155-116 A (5)

3. **The proposed patio shall not alter or redirect the flow of storm water as recognized by the approved and recorded grading plan.**

4. **Newly calculated impervious coverage stands at 29.4% as proposed. A maximum coverage of 32% is allowable. A maximum of 352 sq. ft of impervious coverage is permitted without additional on lot storm water management facilities as required by ACT 167**

5. Contractors shall be properly registered with the Commonwealth of Pennsylvania Attorney General's office

6. **Inspections shall be scheduled allowing a minimum of 24-hr notice by calling 610-384-0600. Required inspections include; 1) Site, 2) Final**

106 VERDANT DR.
PHOENIXVILLE, PA 19460

$55

WE NO LONGER OWN THIS HOME. WE HAVE MOVED TO:

Caln Township
253 Municipal Drive, Thorndale, PA 19372
610/384-0600, Fax 610/384-0689
ZONING PERMIT APPLICATION – PERMIT FEES ARE NON-REFUNDABLE.
Minimum fee due at time of permit application

Address_____ **Subdivision**_____ **Lot #**_____ **Zoning Dist.** R-3

IDENTIFICATION – To be completed by all applicants
OWNER and/or TENANT
Name: NAPOLEON MARIANO & ADRIENNE SHERIDAN
Address: 3245 TYNING LN.
DOWNINGTOWN, PA 19335
Phone #:

Contractor Information: Effective 7/1/09 State Cert. # required:
Name: CAMOCRETE
Address:
Phone #:

ZONING PERMITS

Fence/Wall	☐	Patio	☒
Forestry Grading	☐	Shed	☐
Sign	☐		

DATE:
JOB COST: $ 4,000 00

WALL **Type:**_____ **Hgt.**_____
(less than 4' in height)

No wall shall be erected within a floodway, street right-of-way, utility easement, drainage or sewer easement. Please show all easements that exist on your property.

Show location of wall in relation to structures.
Walls erected within the require front yard shall not exceed three (3) feet in height

SIGNS

Wall	☐	Special Event	☐
Freestanding	☐	(date of event)_____	
Banner	☐	Grand Opening	☐

Signs illuminated ☐ yes ☐ no
Existing Signs
Size of ea. Sign
Type of Signs
Bldg. Dimensions
Wall Frontage
Plot plan showing location of all signs (with dimensions) in relation to building and street right of way.

FENCE **Type:**_____
Height:_____

No fence shall be erected within a floodway, street right-of-way, utility easement, drainage or sewer easement. Please show all easements that exist on your property.

Show location of fence in relation to structures.

Fences erected within the required front yard shall not exceed five (5) feet.

SHEDS (Less than 1000 Sq. Ft.) ☐

Size of Shed

Type of Shed		Type of foundation	
Wood	☐	Concrete Blocks	☐
Metal	☐	Gravel Bed	☐
		Concrete Slab	☐
		Other	☐

PATIO : Size 18 X 36 Type CONCRETE Show location and distances to property line on detailed plot plan.
Plot plan must give dimensions of all structures (house, driveway, and other accessory structures)

648 sq. ft

SIGNATURE OF APPLICANT N. Mariano DATE: 25 Aug '14

DO NOT WRITE IN THIS SPACE – FOR OFFICE USE ONLY

Permit # 14-00653	Approved By:	Permit Fee: 55.00	Date Issued: 9/22/2014

REMARKS: See attached Review Comments

#2519 PATIO INSTALLED HOME SOLD

3245 Tyning

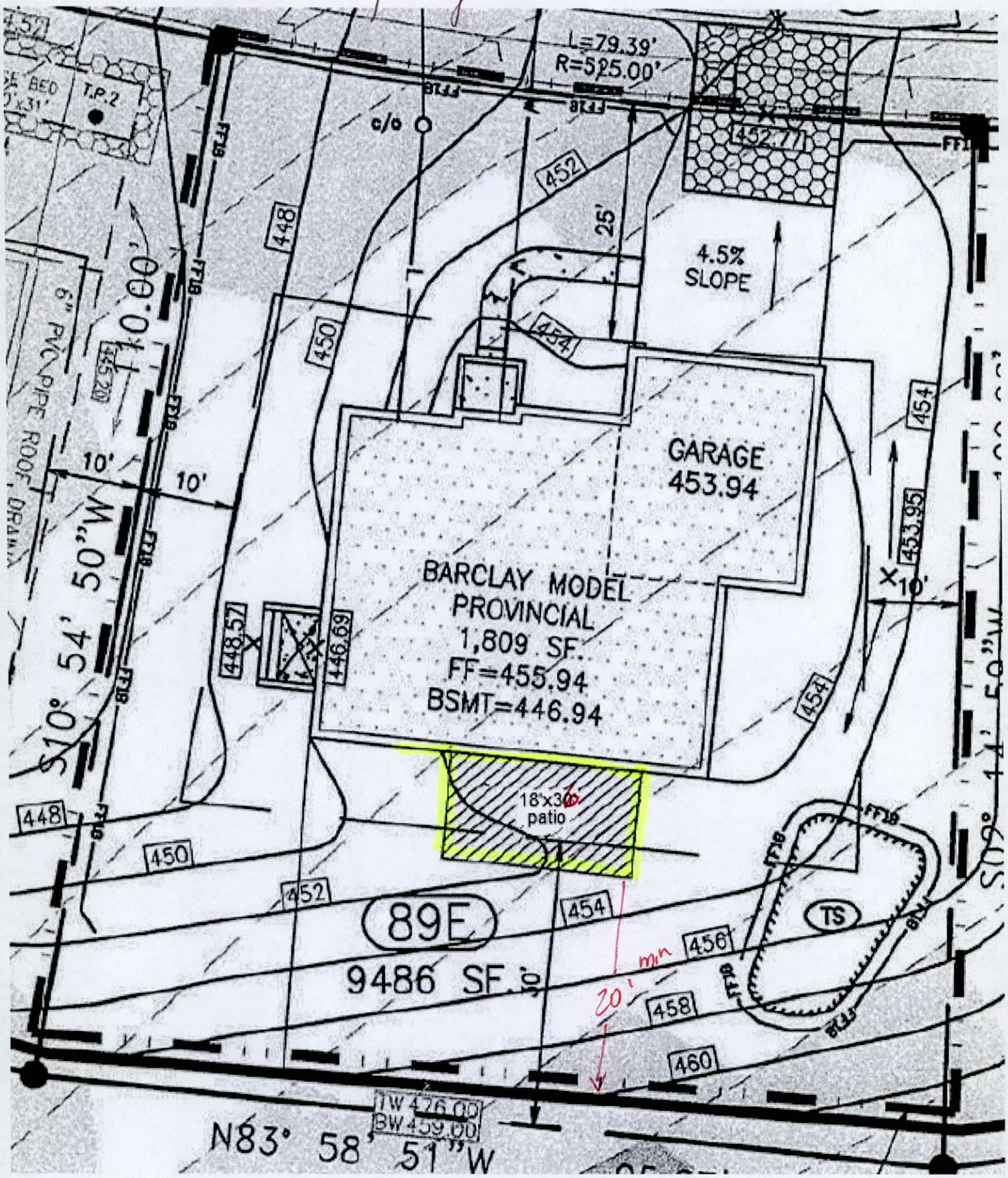

L=79.39'
R=525.00'
c/o
T.P.2
452.77
452
448
25'
4.5%
SLOPE
450
454
GARAGE
453.94
453.95
10'
10'
10'
BARCLAY MODEL
PROVINCIAL
1,809 SF.
FF=455.94
BSMT=446.94
448.57
446.69
454
18'x36'
patio
448
450
452
454
89E
9486 SF.
456
458
460
TS
20' min
TW 476.00
BW 459.00
N83° 58' 51"W
S10° 54' 50"W
110.00'
6" PVC PIPE ROOF DRAIN

CALN TOWNSHIP

DEPARTMENT OF CODE ENFORCEMENT

Andrew F. Reczek, Director of Code Enforcement
Stephen L. Miller, Code Official/Fire Marshal
Raymond Stackhouse, Code Official / Deputy Fire Marshal
Joseph Arvay, Code Official / Housing Inspector

www.calntownship.org

610-384-0600 fax: 610-384-0689 Email: andyr@calntownship.org
253 Municipal Drive, P.O. Box 72149 Thorndale, Pa. 19372-0149

Building Permit Review Sheet

Zoning District:		R-3 Single-Family Dwelling
Approved As:		Cluster Development
Lot # 89E		**Address**: 3245 Tyning Lane
Lot Area: 10,286 sq.ft.		Minimum Lot Area: 8,000 sq.ft.
Required Setbacks:	Front 25'	Side: 10' side
	Rear: 30'	
Impervious Coverage Limit:		**32% STEEP SLOPES**
Building Footprint		1,817 sq.ft
Driveway		560 sq.ft
Other Proposed Coverage's		0 sq.ft.
Total Coverage		2,377 sq.ft. + 648 = 3025
Divided by Lot Area		10,286 sq.ft. ÷ 10,286 = 29.4%
Provided Coverage		**23.1%**
Building Coverage Limit		**30%**
Building Footprint		1,817 sq.ft.
Divided by Lot Area		10,286 sq.ft.
Provided Building Coverage		**17.6%**

Model: Barclay Provincial

Options: On-Lot Seepage Bed, Finished Basement w/ Powder Room, Custom Garage

ACT 167 = 1,000 - 648 = 352 sq.ft

Building Permit Fee:

Living Space	Basement	708 sq.ft.
	1st Floor	1,322 sq.ft.
	2nd Floor	1,194 sq.ft.
	Total Living Space	3,224 sq.ft
		X . 40 = **$1,289.60**
Accessory Space:	Basement (utility)	614 sq.ft.
	Garage	467 sq.ft.
	Porch / Ext Stairs	28 sq.ft.
	Deck	0 sq.ft.
	Other	0 sq.ft.
	Total Accessory	1,108 sq.ft
		X .20 = **$ 221.60**
	Total Building Permit Fee	**$ 1,511.20**

CALN TOWNSHIP
253 Municipal Drive, Thorndale, PA 19372
610/384-0600, Fax – 610/384-0689
BUILDING PERMIT APPLICATION – PERMIT FEES ARE NON-REFUNDABLE
Minimum fee due at time of permit application

Address: 3245 Tyning Lane **Subdivision:** Northgate- Bailey Station **Lot:** 089E **Zoning Dist.** R-3

Building Improvement

New Building	X
Addition	☐
Alteration	☐
Basement	X
Deck /Ramp	☐
Demolition	☐
Driveway 560 sq.ft	X
Fire Protection ***	
Sprinkler/Alarm	☐
Hot Tub **see directions	☐
Tenant fit-out	☐
Mechanical **	X
Patio	☐
Plumbing	X
Pool **see directions	☐
Roof **see directions	☐
Shed (>1000 sq.ft.)	☐
SEEPAGE BED	☐
Other Porch 28	X

IDENTIFICATION – To be completed by all applicants

OWNER
Name: B. Station Crossing, LLC. (BSC)

Address: B. Station Crossing, LLC.
c/o Provident Homes Corp.
128 Willowbrook Lane
West Chester, Pa 19382

Phone #:
Fax #:

Contractor Information:
Name: Provident Homes Corp. (PHC)

Address: Provident Homes Corp. (PHC)
128 Willowbrook Lane
West Chester, Pa 19382

RECEIVED
APR 17 2009
CODES

Phone #: (610) 692-7697
Fax #: (610) 692-7698

Residential X
Location: Downingtown, Pa

Commericial ☐
Location:

DATE: 04-16-09
Job Cost: $120,000

Sewage Disposal
Public X
Private ☐

Water Supply
Public X
Private ☐

Principal Type of Frame
Frame ☐
Masonry ☐
Wood X
Structural Steel ☐
Reinforced Concrete ☐
Other/specify ☐

Site located in Flood Area
Yes ☐ No X

Submit floor plan showing Location w/clearances & material types /Mechanical
Central AC?
Yes X No ☐
Will there be an Elevator?
Yes ☐ No X

Type of Heating Fuel
Gas X
Oil ☐
Electric ☐
Coal ☐
Other ☐

Residential Building Area:
# of Stories- 2 708 Habitable
Basement - ~~1322~~ sq.ft 614 unhl
Garage - 467 sq.ft
1st. Floor - 1,322 sq.ft
2nd.Floor - 1,194 sq.ft
Total Habitable
Space - 2516 sq.ft
+ 708 = 3224

Commercial Projects:
Use Group
Classification
Occupancy
Load
Sprinklered ☐Yes X No

Residential Bldg. Only
Bedrooms 4
Bathrooms 2.5

Model Type:
Barclay Provincial w/ Covered Porch

Lot Area: 10,286 sq.ft. ✓
Building Coverage: 1,789 (17.39%) sq.ft.
Total Impervious Coverage: 2,454 (23.85%) sq.ft. ok
Steep Slope limitations apply
max impervious coverage = 32%

 # Off Street Parking Spaces.
0 – 2 sp. / Dwelling

SIGNATURE OF APPLICANT: [signature] DATE: 4/16/09

DESCRIPTION /COMMERCIAL ACTIVITIES Cluster Dev. / Single Family / Barclay Provincial.
Finished Basement, Custom Garage, Basement Powder Room / on lot Seepage
Rough in only.

DO NOT WRITE IN THIS SPACE – FOR OFFICE USE ONLY

Permit # 68 | Approved By [signature] | Permit Fee: $1,511.20 | Date Issued: 4/23/09

REMARKS:

CALN TOWNSHIP

Department of Code Enforcement

Andrew F. Reczek, Director of Code Enforcement
Stephen L.Miller, Code Official/Fire Marshal
Raymond Stackhouse, Code Official/Deputy Fire Marshal
Joseph Arvay, Property Maintenance/Housing Inspector

www.calntownship.org

610-384-0600 fax: 610-384-0689 Email: andyr@calntownship.org
253 Municipal Drive, P.O. Box 72149 Thorndale, Pa. 19372-0149

PROTOCOL FOR ZONING PERMIT SUBMITTAL

1. **Provide plot plan showing all existing & proposed construction No application will be accepted without the above information. Provide setback dimensions from any structure (new or existing, ie – sheds, walls < 4 ft., deck < 30", fences, signs) or paved surface to all property lines.**

2. **Sign permit shall include plot plan. Building dimension with size & location of all new and existing signs. Freestanding signs – show height.**

3. **The minimum fee will be collected at time of application. Caln Township Code Official will calculate total fee. Any additional fees will be collected prior to issuance of Permit. Fee schedule is available on line @ www.calntownship.org**

4. **Caln Township reserves the right to reject any permit application that does not comply with above referenced requirements**

5. **The Zoning Officer has thirty (30) days to review applications.**

6. **Pennsylvania Home Improvement Contractor License number required.**

7. **Forestry Application - Please provide two (2) detailed plot plans showing extent of forestry/grading. Plot plan must show property dimensions as well as all structures (if any) located on same with distances to property line. The applicant must also show limits of disturbances as it pertains to existing structures. Locate all easements, swales, berms, etc. that exist on the property and indicate location of erosion and sedimentation control measures to be used.**

Signature of applicant N. Mariano

Date 25 August 2014

Caln Township
Caln Twp. Municipal Authority
253 Municipal Drive
Thorndale,PA 19372

INVOICE #
14-00539

INVOICE DATE: 09/11/14
DUE DATE: 10/11/14

ACCOUNT ID: 14-00210

WHEELER,JAMES C II
3245 TYNING LA
DOWNINGTOWN, PA 19335

PERMIT INFORMATION
PERMIT NO: 14-00653
LOCATION: 3245 TYNING LA

QUANTITY/UNIT	SERVICE ID	DESCRIPTION	UNIT PRICE	AMOUNT
		Permit No: 14-00653		
1.0000	RC-PATIO	PATIO Permit No: 14-00653	55.00000	55.00
			TOTAL DUE:	$ 55.00

RECEIVED
SEP 11 2014
CALN TWP.

PAYMENT COUPON - PLEASE DETACH AND RETURN THIS PORTION ALONG WITH YOUR PAYMENT

Caln Township
Caln Twp. Municipal Authority
253 Municipal Drive
Thorndale,PA 19372

INVOICE #: 14-00539
DESCRIPTION: Permit No: 14-00653
ACCOUNT ID: 14-00210
DUE DATE: 10/11/14
TOTAL DUE: $ 55.00

WHEELER,JAMES C II
3245 TYNING LA
DOWNINGTOWN, PA 19335

TOWNSHIP OF CALN
253 MUNICIPAL DR
THORNDALE, PA. 19372
610/384-0400

CERTIFICATE OF OCCUPANCY

Building Permit No. 2010-00102-BUI

UCC Certificate of Occupancy No. 8915

Zoning District R3

REMARKS

Permission is hereby given:

GRIFFITH, JAIME
(owner of use)

JAIME GRIFFITH
owner (new)

OWNER/APPLICANT
contractor

Use Type: DECK - LOT 84 BAIILEY STATION NORTHGATE

LOT #84 BAILEY STATION NORTHGATE
(Lot & Development)

At: 3228 TYNING LA., DOWNINGTOWN, PA 19335

For: RESIDENTIAL ACCESSORY STRUCTRE - DECK

2/1/12
Building Inspector DATE

2/1/2012
Zoning Officer/Building Code Official DATE

APPROVED AS TO COMPLIANCE WITH ZONING ORDINANCE.

CALN TOWNSHIP

DEPARTMENT OF CODE ENFORCEMENT

Andrew F. Reczek, Director of Code Enforcement
Stephen L. Miller, Code Official / Fire Marshal
Raymond Stackhouse, Code Official / Deputy Fire Marshal
Joseph Arvay, Property Maintenance / Housing Inspector

www.calntownship.org

Phone: 610-384-0600 Ext. 145 Fax: 610-384-0689
Email: smiller@calntownship.org
253 Municipal Drive, P.O. Box 72149 Thorndale, Pa. 19372-0149

MISCELLANEOUS INSPECTION REPORT

DATE: 7/23/10 SM OK

LOCATION: 3228 Tyning

TYPE OF INSPECTION: Deck Final

- Corner Anchors in place, Threaded Rod to Interior Floor Joists, Hold control
- Guard posts Blocked & Lagged in place - 36" + OK
- No steps
- Complete, ok to close

SM

CALN TOWNSHIP

DEPARTMENT OF CODE ENFORCEMENT

Andrew F. Reczek, Director of Code Enforcement
Stephen L. Miller, Code Official / Fire Marshal
Raymond Stackhouse, Code Official / Deputy Fire Marshal
Joseph Arvay, Property Maintenance / Housing Inspector

www.calntownship.org

Phone: 610-384-0600 Ext. 145 Fax: 610-384-0689
Email: smiller@calntownship.org
253 Municipal Drive, P.O. Box 72149 Thorndale, Pa. 19372-0149

MISCELLANEOUS INSPECTION REPORT

DATE: 6-11-10

LOCATION: 3228 Tyning

OK

TYPE OF INSPECTION: Deck Rough

- 6x6 posts notched for Beam
- (2) 2x12 Beams, set in post notch & Thru Bolted.
- 2x10 Joists, 16" O.C., Onhangers at Ledger
- 2x10 Ledger, Choice #2 per Mulhen & Kulp detail from Bedwell, Thru Bolts 5/8" 16" O.C.

* Simpson H3 clip needed for Joist to Ledger connection (Hold Contact)

See At Final

* Explained the need for Brackets for guard posts

SW

CALN TOWNSHIP

DEPARTMENT OF CODE ENFORCEMENT

Andrew F. Reczek, Director of Code Enforcement
Stephen L. Miller, Code Official / Fire Marshal
Raymond Stackhouse, Code Official / Deputy Fire Marshal
Joseph Arvay, Property Maintenance / Housing Inspector

www.calntownship.org

Phone: 610-384-0600 Ext. 145 Fax: 610-384-0689
Email: smiller@calntownship.org
253 Municipal Drive, P.O. Box 72149 Thorndale, Pa. 19372-0149

MISCELLANEOUS INSPECTION REPORT

DATE: 5/28/10

LOCATION: 3228 Tyning Lane

TYPE OF INSPECTION: Deck Footer OK

- (4) Pier type Footers, 6' o.c., 14' from House, in Firm/Dry/undisturbed Soil
- ok to pour
- Builder ok with plan Notes
- Next Inspection Rough Frame

SM

CALN TOWNSHIP

DEPARTMENT OF CODE ENFORCEMENT

Andrew F. Reczek, Director of Code Enforcement
Stephen L. Miller, Code Official / Fire Marshal
Raymond Stackhouse, Code Official / Deputy Fire Marshal
Joseph Arvay, Property Maintenance / Housing Inspector

www.calntownship.org

Phone: 610-384-0600 Ext. 145 Fax: 610-384-0689
Email: smiller@calntownship.org
253 Municipal Drive, P.O. Box 72149 Thorndale, Pa. 19372-0149

MISCELLANEOUS INSPECTION REPORT

DATE: 5/24/10

LOCATION: 3228 Tyning

TYPE OF INSPECTION: Deck Site Insp

Site ok per Zoning District.

10' + Sides

20' Rear

ok to proceed.

CALN TOWNSHIP
253 Municipal Drive, Thorndale, PA 19372
610/384-0600, Fax – 610/384-0689
BUILDING PERMIT APPLICATION – PERMIT FEES ARE NON-REFUNDABLE
Minimum fee due at time of permit application

Address 3228 Tyning Lane Downingtown, PA 19335 **Subdivision** _____ **Lot #** 84 **Zoning Dist.** R-3

Building Improvement
- New Building ☐
- Addition ☐
- Alteration ☐
- Basement ☐
- Deck /Ramp ☒
- Demolition ☐
- Driveway ☐
- Fire Protection ***
- Sprinkler/Alarm ☐
- Hot Tub **see directions ☐
- Tenant fit-out ☐
- Mechanical ** ☐
- Plumbing ☐
- Pool**see directions ☐
- Roof**see directions ☐
- Shed (>1000 sq. ft.) ☐
- Tank ☐
- Other ☐

IDENTIFICATION – To be completed by all applicants
OWNER
Name: L. TOM BURNLEY
Address: 3228 Tyning Ln
Downingtown, PA 19335
Phone #:

Contractor Information: Effective 7/1/09 State Cert. number required.
Name:
Address: Homeowner
Phone #:

Residential ☒ Location: _____
Commercial ☐ Location: _____

DATE: 4/14/10
Job Cost: 10,200

Sewage Disposal
- Public ☒
- Private ☐

Water Supply
- Public ☒
- Private ☐

Principal Type of Frame
- Frame ☐
- Masonry ☐
- Wood ☒
- Structural Steel ☐
- Reinforced Concrete ☐
- Other/specify ☐

Site located in Flood Area
Yes ☐ No ☒

Submit floor plan showing Location w/clearances & material types /Mechanical
Central AC? Yes ☒ No ☐
Will there be an Elevator? Yes ☐ No ☒

Residential Building Area:
# of Stories _____
Basement _____
Garage _____
1st. Floor _____
2nd. Floor _____
Total Habitable Space _____

Commercial Projects:
Use Group
Classification _____
Occupancy
Load _____
Sprinklered ☐ Yes ☐ No

Residential Bldg. Only
Bedrooms 4
Bathrooms 2 1/2

Residential Bldg. Only
Bedrooms _____
Bathrooms

Type of Heating Fuel
- Gas ☒
- Oil ☐
- Electric ☐
- Coal ☐
- Other ☐

Lot Area 8,000 sq.ft.
Building Coverage 21.56% ~~sq.ft.~~
Total Impervious Coverage _____ sq.ft.

 # Off Street Parking Spaces. 1

SIGNATURE OF APPLICANT: [signature] DATE: 4/15/2010

DESCRIPTION /COMMERCIAL ACTIVITIES Building A Deck

DO NOT WRITE IN THIS SPACE – FOR OFFICE USE ONLY

Permit # 102	Approved By: [signature]	Permit Fee: 192.00	Date Issued: 5/12/2010

REMARKS: See attached Review comments

24x16 Deck

TOWNSHIP OF CALN
253 MUNICIPAL DR
THORNDALE, PA. 19372
610/384-0600

24 hrs. notice required for inspection scheduling

INSPECTION ASSIGNMENT SHEET

Building Permit No. 2010-00102-BUI

Location 3228 TYNING LA., DOWNINGTOWN, PA 19335

Owner GRITTITH, JAIME

Contractor OWNER/APPLICANT

Description DECK - LOT 84 BAIILEY STATION NORTHGATE - SEE COPY OF PERMIT

Comments SEE COPY OF PERMIT REVIEW LETTER ATTACHED

SITE INSPECTION PRIOR TO BEGINNING CONSTRUCTION

FORM INSPECTION PRIOR TO POURING FOOTERS

ROUGH FRAMING INSPECTION PRIOR TO INSULATION OR INTERIOR COVERING (rough elec

FINAL INSPECTION (performed after work is complete and PRIOR TO USING OR OCCUPYING CO

CALN TOWNSHIP

DEPARTMENT OF CODE ENFORCEMENT

Andrew F. Reczek, Director of Code Enforcement
Stephen L. Miller, Code Official / Fire Marshal
Raymond Stackhouse, Code Official / Deputy Fire Marshal
Joseph Arvay, Code Official / Housing Inspector

www.calntownship.org

610-384-0400 fax: 610-384-0689 Email: andyr@calntownship.org
253 Municipal Drive, P.O. Box 72149 Thorndale, Pa. 19372-0149

May 12, 2010

L.Tom Burnley
3228 Tyning Lane
Downingtown, PA 19335

PERMIT REVIEW: Building Permit / Accessory Deck

1. All work must comply with the 2009 International Residential Code and the Caln Township Zoning Code.

2. **Deck structures located within Cluster Developments shall maintain a minimum twenty (20) foot rear yard setback and a minimum ten (10) foot side yard setback. Property lines must be established during site inspection**

3. All new deck footings shall be a minimum **6" thick, 12" diameter footing** and be placed on firm and stable soils at a minimum depth of 36". All posts shall be firmly supported by a solid footing. **Attachment shall be provided at the connection between post and footing to prevent uplift.**

4. **(2) 2" x12" beam is permitted to span a maximum 8'1" in accordance with Table R502.5 (2). Bearing and attachment shall be provided at each supporting post.**

5. 2" x 10" floor joists, SPF #2, 16" on center shall be limited to 15'5"; **Joist cantilevers shall not exceed 2'. Adequate bearing shall be provided for all joist members. Joist hangers shall be provided as required for bearing**

6. **Two 1,500 lb. Hold Downs shall be installed to control lateral movement in accordance with R502.2.2.2**

7. **Ledger Board connections shall be made in accordance with the approved engineered practice provided by Mulhern and Kulp**

8. Composite Decking shall be installed in accordance with the manufacture's specification.

9. Flashing shall be provided at the connection between ledger board and the main structure.

10. Stair risers shall not exceed 8 ¼ " in height, Tread depths shall not be less than 9". All risers shall be enclosed and shall not differ in height more than 3/8"

11. Guard railings are required on all raised surfaces (decks, ramps or patios) 30" or greater above grade and on all open sides of stairways with 4 or more risers. Guard Railings shall be a minimum 36" in height and be capable of preventing the passage of a 4" sphere. **Guards shall support a 200 lb. lateral load at any point along the top rail.**

12. A graspable hand railing is required on at least one side of stairs with 4 or more risers and on all ramps. Hand railings shall be 34" – 38" above the stair nosing.

13. **Stairway illumination shall be provided to all stair treads in accordance with Section R303.6**

14. **Contractors shall be properly registered with the Commonwealth of Pennsylvania Attorney General's office.**

Connection required
Engineered Detail
ENP Rim Board

1500 lb Hold Down
Tension Devices

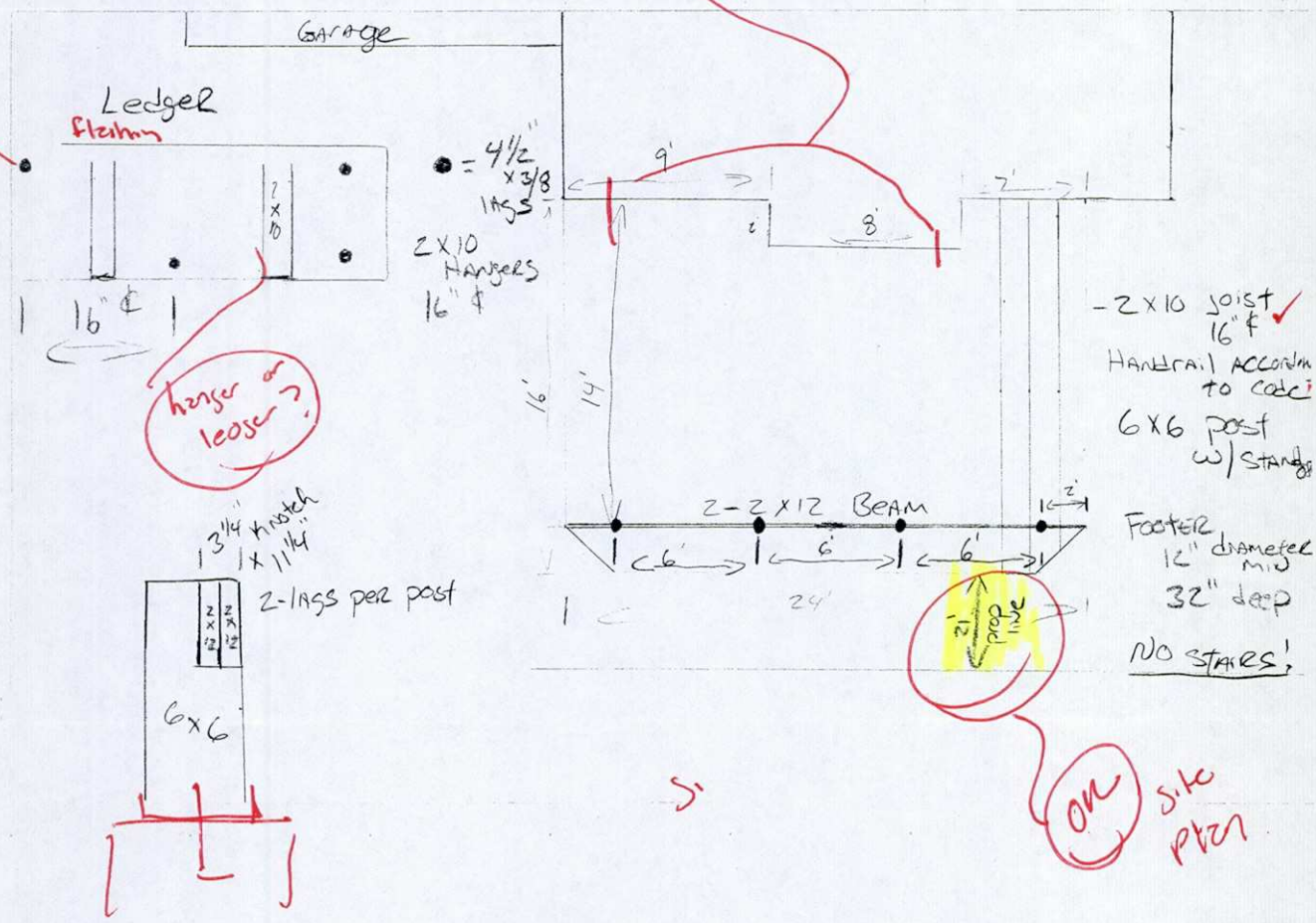

hanger or leaser?

OK site plan

Guard railing Detail
+ Structural Connection detail } Required

Denied 4/20/10
Engineered Approval
Required

Per Mahan + KVIP Details OK

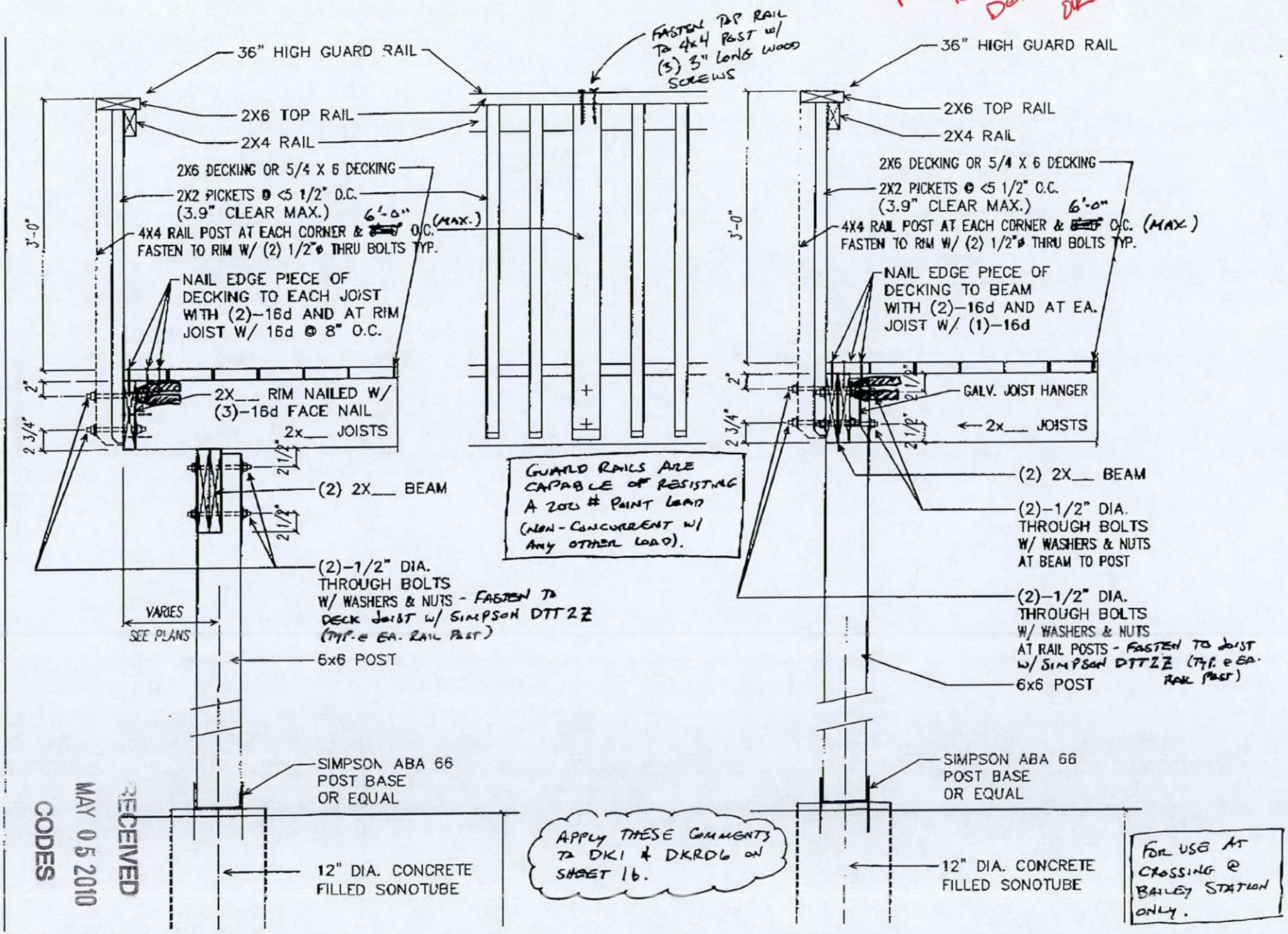

RECEIVED MAY 05 2010 CODES

PROJECT NAME: CROSSING @ BAILEY STATION - PROVIDENT HOMES

SEE DK2 ON 16 FOR ADD'L INFO NOT SHOWN.

COORD. w/ RECENT M&K COMMENTS/CORRECTIONS ON DK2 DETAILS (REV. 3/31/10)

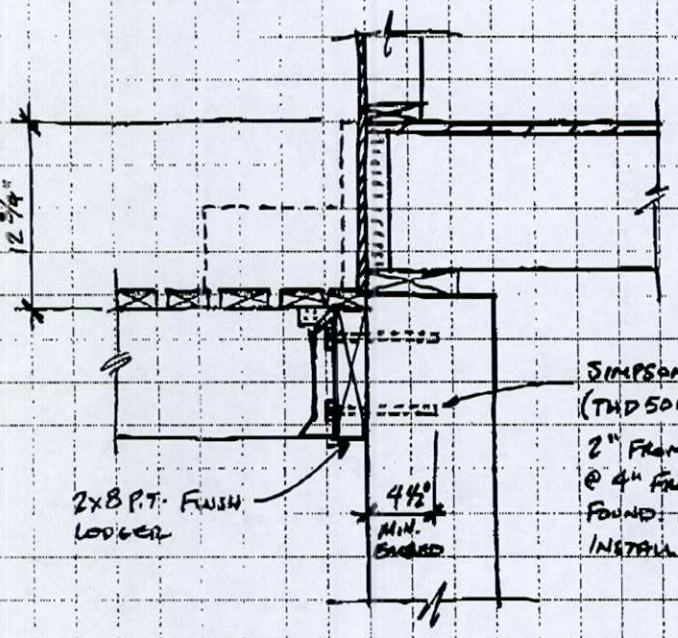

ALTERNATE DECK LEDGER CONNECTION @ FOUNDATION WALL

RECEIVED
MAY 05 2010
CODES

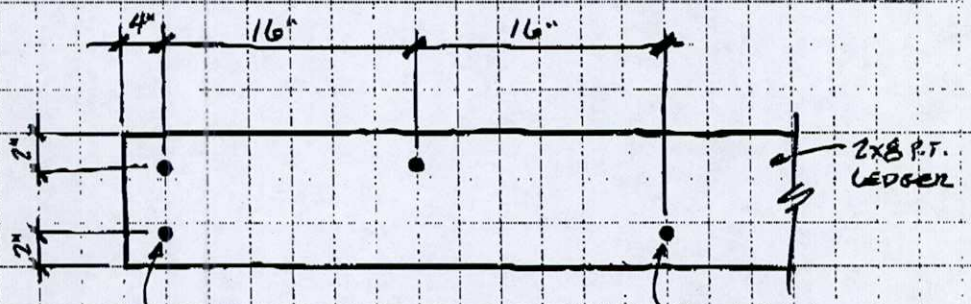

FACE VIEW OF FLUSH LEDGER

FOR USE @ CROSSING @ BAILEY STATION ONLY

01B-1002J
PROJECT NUMBER

4/5/10
DATE

SHEET

SDI
DRAWN BY

MULHERN & KULP
STRUCTURAL ENGINEERING
Residential + Commercial

Mulhern & Kulp Structural Engineering, Inc.
23 South Maple St., Suite 150 • Ambler, Pa 19002
Telephone: 215-646-8300 Fax: 215-646-8310
www.mulhernkulp.com

4848796024

RECEIVED
MAY 05 2010
CODES

PROVIDENT HOMES
CROSSING @ BAILEY STATION

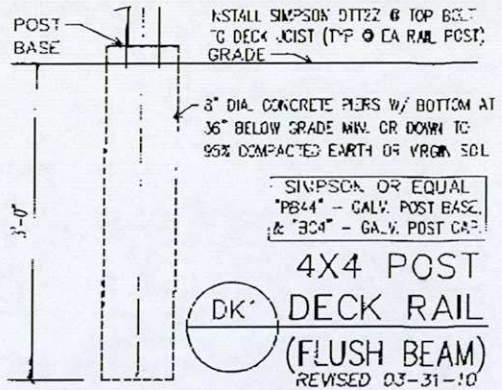

DECK CONSTRUCTION NOTES:

DECK DESIGN LIVE LOAD=40 PSF

WOOD DECK CONSTRUCTION SHALL BE OF PRESSURE TREATED LUMBER

HARDWARE FOR DECK CONSTRUCTION SHALL BE CORROSIVE RESISTANT TYPE AND SHALL BE COMPATIBLE WITH PRESSURE TREATED LUMBER USED.

DECK CONSTRUCTION NOTES:

FIELD-CUT ENDS, NOTCHES & DRILLED HOLES SHALL BE TREATED IN THE FIELD PER AWPA M4.

WOOD IN CONTACT W/ CONCRETE SHALL BE PRESSURE TREATED LUMBER

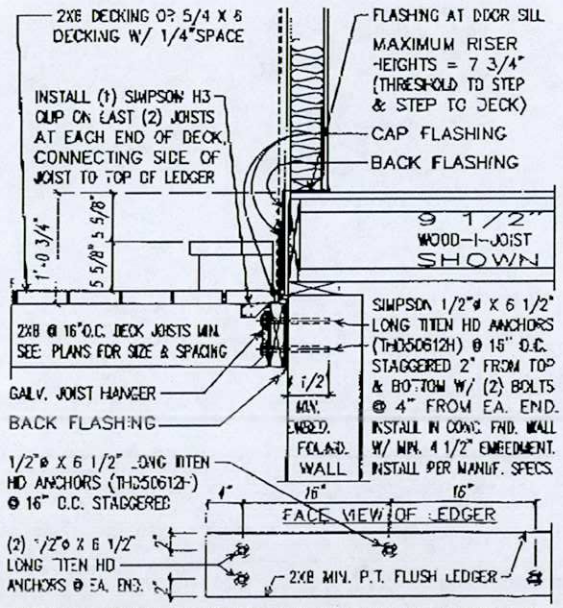

LEDGER CONNECTIONS HAVE BEEN DESIGNED IN ACCORDANCE W/ ACCEPTED ENGINEERING PRACTICE (SECTION R502.2.2.2)

DK2 DECK DROP LEDGER

DECK LEDGER CONNECTION @ FOUNDATION WALL
ADDED 04-08-10

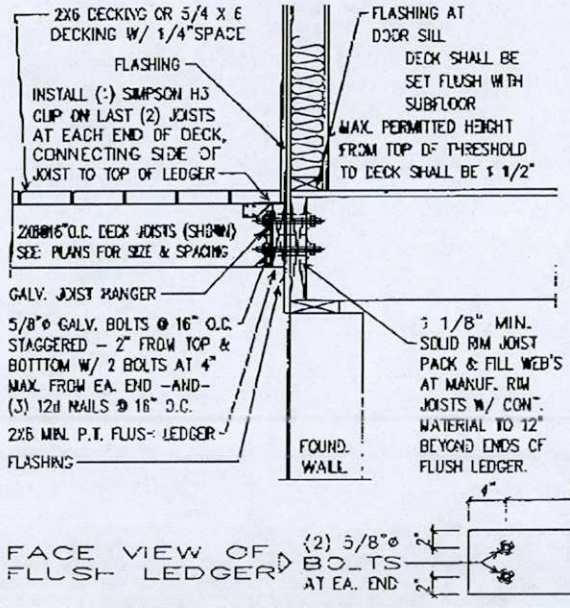

LEDGER CONNECTIONS HAVE BEEN DESIGNED IN ACCORDANCE W/ ACCEPTED ENGINEERING PRACTICE (SECTION R502.2.2.2)

DK2 DECK FLUSH LEDGER

DECK LEDGER CONNECTION @ BUILDING RIM JOIST
REVISED 03-31-10

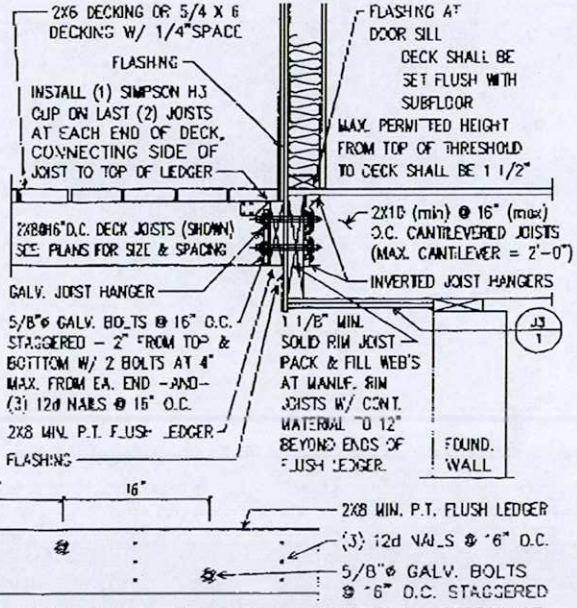

LEDGER CONNECTIONS HAVE BEEN DESIGNED IN ACCORDANCE W/ ACCEPTED ENGINEERING PRACTICE (SECTION R502.2.2.2)

DK2 DECK FLUSH LEDGER AT BAY

DECK LEDGER CONNECTION @ BUILDING RIM JOIST
REVISED 03-31-10

DETAIL SHEET 16

MAY 04,2010 03:18P

SIMPSON Strong-Tie

EARTHQUAKE/HIGH WIND

Products on this page require a professional engineer to specify spacing, embedment and load requirements. Consult with your building department for local code requirements.

FHA *Strap Ties*

All purpose, heavy-duty strap ties. Use where soles or plates are cut at wall intersections, and as ridge ties.

FINISH: G90 galvanized.

Typical FHA Installation (use 16d nails for all sizes)

H *Hurricane Ties*

Provides wind and seismic ties for trusses and rafters. Use these connectors for general tie purposes, strongback attachments and as all-purpose ties where one member crosses another. The designs allow for installation on the inside of the member without interfering with the sheathing material.

FINISH: G90 or ZMAX galvanized. Some models available in stainless steel and require stainless steel fasteners. Use HDG fasteners for ZMAX.

INSTALLATION:
- H1 and H10 do not replace solid blocking.

Use 8d nails for all sizes shown, except the H10, which requires 8dx1½"

Typical H1 Installation

Typical H2.5A Installation

Typical H3 Installation

Typical H4 Installation

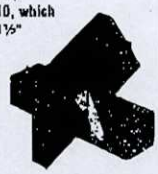

Typical H5 Installation

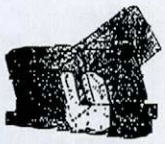

Typical H10 Installation

HDA *Holdowns*

Holdowns are used to transfer tension loads between floors, to tie purlins to masonry or concrete, etc. Use HDAs for overturn requirements and other applications to transfer loads.

FINISH: G90 galvanized. Some models available in HDG, and required HDG fasteners.

INSTALLATION:
- Bolt holes shall be a minimum of 1/32" to a maximum of 1/16" larger than the bolt diameter.

Anchor bolt:
5/8" for HD2A, HD5A;
7/8" for HD6A, HD8A, HD10A;
1" for HD14A.

Stud machine bolt:
5/8" for HD2A,
3/4" for HD5A;
7/8" for HD6A, HD8A, HD10A;
1" for HD14A.

Typical HD5A Installation

Anchor bolt type, length and embedment must be specified by a qualified professional.

PHD *Holdowns*

The predeflected holdown is a revolutionary development in holdown connections. Predeflected during manufacturing, the PHD virtually eliminates deflection from material stretch.

FINISH: G90 galvanized. HDG available for PHD2 and PHD5; these models require HDG fasteners.

INSTALLATION:
- Place the PHD over the anchor bolt.
- Install Simpson's code-recognized SDS¼x3 wood screws, which are provided with the holdown. (Lag screws will not achieve the same load.)
- For an improved connection, use a steel nylon locking nut or a thread adhesive on the anchor bolt. (No washer required.)
- To tie double 2x members together, the designer must determine the fasteners required to bind members to act as one unit without splitting the wood.

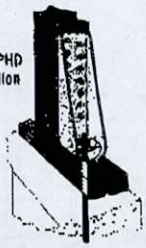

Typical PHD Installation

Anchor bolt:
5/8" for PHD2-SDS3 and PHD5-SDS3,
7/8" for PHD6-SDS3 and PHD8 SDS3

Stud screws:
SDS¼x3" for all sizes.

Anchor bolt type, length and embedment must be specified by a qualified professional.

LOOKING FOR A PARTICULAR FINISH?

Most Simpson products are available in G90, the industry standard. Where greater corrosion protection is required, we offer the same product in ZMAX or HDG, or stainless steel. We are constantly modifying our product offering in response to our customers' needs. Contact us at (800) 999-5099 or www.strongtie.com for a current list of products offered in ZMAX, HDG or stainless steel. *See pg 5 for Corrosion Information.*

RECEIVED
MAY 05 2010
CODES

SIMPSON Strong-Tie

LMA *Mudsill*

The LMA offers a lighter gauge. Tw replacement for

FINISH: G90 gal galvanized. Use

INSTALLATION:
- Place anchors each sill.
- Refer to Simps *Connectors* ca

MAB *Mudsill*

Anchors mudsill

FINISH: G90 or ZMAX models

INSTALLATION:
- Prior to install accommodate
- Immediately a the concrete u with 10dx1½"
- For a center h the mudsill. W and install nail
- Refer to Simps *Connectors* ca

MAS *Mudsill*

A fast, low insta pouring concret concrete after p anchor bolts to to lose. For slab plate drilling and

FINISH: G90 or for ZMAX mode

INSTALLATION:
- Use a minimu MAS located
- Refer to Simp *Connectors* ca

SP *Stud Fla*

Ties top plates t or seismic activ completely arou

FINISH: G90 A available in ZMA fasteners for ZM

INSTALLATION:
- SP1, SP2, SP a 45° angle th
- Install the res

TOWNSHIP OF CALN

PERMIT

Permit No: 2010-00102-BUI

Date Issued: 5/13/2010

Location of Work: 3228 TYNING LA

Type of Work: DECK - LOT 84 BAIILEY STATION NORTHGATE - SEE COPY OF PERMIT REVIEW LETTER ATTACHED

Owner: GRITTITH, JAIME

Contractor: OWNER/APPLICANT 610.504.2040

Parcel #:

BUILDING CODE OFFICIAL

THIS PLACARD MUST BE POSTED IN A CONSPICUOUS PLACE ON THE PREMISES, EASILY VISIBLE FROM THE PRINCIPAL STREET, WELL SECURED IF EXPOSED TO THE WEATHER, DURING THE ENTIRE CONSTRUCTION TIME.

WORK MUST BE STARTEDWITHIN 6 MONTHS FROM DATE OF ISSUE

L. Tom Burnley, CFS, CRPC®
Ameriprise Financial Advisors
855 Springdale Drive
Suite 100
Exton, PA 19341
Phone (484) 879-6021
Fax (484) 879-6024

Ameriprise Financial Advisors

Fax

To: Kathy / Andrew **From:** L. Tom Burnley

Fax: [redacted] **Pages:** 6 Total

Phone: **Date:** 5/4/10

Re: **CC:**

☒ **Urgent** ☐ **For Review** ☐ **Please Comment** ☐ **Please Reply** ☐ **Please Recycle**

• **Comments**

Hopefully this is everything you need, If not please call me on my cell @ [redacted] Thank you!

L. Tom Burnley

RECEIVED
MAY 05 2010
CODES

CALN TOWNSHIP

DEPARTMENT OF CODE ENFORCEMENT

Andrew F. Reczek, Director of Code Enforcement
Stephen L. Miller, Code Official / Fire Marshal
Raymond Stackhouse, Code Official / Deputy Fire Marshal
Joseph Arvay, Property Maintenance / Housing Officer

www.calntownship.org

610-384-0400 fax: 610-384-0689 Email: andyr@calntownship.org
253 Municipal Drive, P.O. Box 72149 Thorndale, Pa. 19372-0149

April 21, 2010

L. Tom Burnley
3228 Tyning Lane
Downingtown, PA 19335

RE: Building Permit / Accessory Deck

Dear Mr. Burnley:

This letter is to inform you that additional information is needed prior to building permit approval. Please provide the following pieces of information;

1) An "engineered" anchoring detail is required whenever a pressure treated deck ledger board is attached to the home's engineered wood band board in accordance with the 2009 International Residential Code.
2) Please note that a minimum of two (2) 1,500 lb. Hold Down tension devices are also required.
3) Please detail the post / footing connection to prevent uplift
4) A guard railing detail is needed that identifies the proposed design will maintain a minimum 200 lb. lateral load in addition to preventing the passage of a 4" sphere.

Please understand no construction activity is permitted until all the requested information has been submitted and approved by this office. Please feel free to contact me in the event you have any questions regarding this information.

Sincerely,

Andrew F. Reczek
Director / Zoning Officer

cc: File

Date 5/14/10

Township of Caln

Receipt and Proof of Payment

Burnley #2670 $92

GENERAL FUND

01-10-322-910 -- Police Services

01-10-322-900 -- Street Opening Fee

01-10-331-125 -- Vehicle/Speed Ctrl/Ordinance

01-10-361-305 -- Planning Fees

01-10-361-340 -- Zoning Hearing

01-10-362-410 -- Building Permit $92

01-10-362-415 -- Fire Inspection

01-10-362-452 -- U & O Res & Com

01-10-362-601 -- Housing Annual Rental Fee

01-10-362-602 -- Housing Tenant change Fee

01-10-362-610 -- Contractor License Fee

01-10-363-700 -- Bus Shelters

01-10-380-100 -- Miscellaneous

01-10-380-105 -- Tax Certification Fees

01-10-380-110 -- Cell Tower Fees

01-10-387-305 -- Parks/Pavilions

01-10-387-309 -- Recreation Programs

01-_____ --

01-_____ --

01-_____ --

01-_____ --

PAID

MAY 14 2010

CODES

SEWER FUND

08-10-364-824 -- Inspection Fees

08-_____ --

08-_____ --

OTHER FUNDS

3228 Tyning (Deck)

Department DKD

Finance

TOWNSHIP OF CALN
253 MUNICIPAL DR
THORNDALE, PA. 19372
610/384-0400

CERTIFICATE OF OCCUPANCY

Building Permit No. 2010-00098-ZONP

UCC Certificate of Occupancy No. 8656

REMARKS

Zoning District R3

Permission is hereby given:

BALESTRA, ALISON
(owner of use)

ALISON BALESTRA
owner (new)

OWNER/APPLICANT
contractor

Use Type: FENCE

BAILEY STATION NORTHGATE
(Lot & Development)

At: 3225 TYNING LA, DOWNINGTOWN, PA 19335

For: RESIDENTIAL ACCESSORY STRUCTURE - FENCE

Building Code Official 3/30/11 **DATE**

Zoning Officer 3/30/2011 **DATE**

IN OCMPLIANCE WITH CURRENT ZONING CODES

APPROVED AS TO COMPLIANCE WITH ZONING ORDINANCE.

SCANNED
APR 4 - 2011
ELECTRONICALLY FILED

CALN TOWNSHIP

DEPARTMENT OF CODE ENFORCEMENT

Andrew F. Reczek, Director of Code Enforcement
Stephen L. Miller, Code Official / Fire Marshal
Raymond Stackhouse, Code Official / Deputy Fire Marshal
Joseph Arvay, Property Maintenance / Housing Inspector

www.calntownship.org

Phone: 610-384-0600 Ext. 145 Fax: 610-384-0689
Email: smiller@calntownship.org
253 Municipal Drive, P.O. Box 72149 Thorndale, Pa. 19372-0149

MISCELLANEOUS INSPECTION REPORT

DATE: 3/30/11 SM

LOCATION: 3225 Tyning Lane

TYPE OF INSPECTION: Fence Final

- Fence install complete as per approved plot plan
- 4' post & Rail with wire on the inside

Complete SM

Date: 3/18/11

Attn: Code Enforcement

From: Alison Pierce
3225 Tyning Lane
Downingtown, PA 19335
Permit # 2010-98

The fence has not yet been completed due to inclement winter weather. However, the fence will be finished within 2 weeks from today and I will contact you via phone to have the final inspection done.

If you have any questions please contact me at

thank you,

Alison Pierce

CALN TOWNSHIP
DEPARTMENT OF CODE ENFORCEMENT
Andrew F. Reczek, Director of Code Enforcement
Stephen L. Miller, Code Official / Fire Marshal
Raymond Stackhouse, Code Official / Deputy Fire Marshal
Joseph Arvay, Code Official / Housing Inspector
610.384.0600 fax: 610.384.0689 Email: andyr@caintownship.org
253 Municipal Drive, P.O. Box 72149 Thorndale, Pa 19372-0149
www.caintownship.org

March 8, 2011

Ms. Alison Balestra
3225 Tyning Lane
Downingtown, PA 19335

RE: Permit #2010-98
Fence

Dear Ms.Balestra:

Per Section R109.1 of the International Residential Code, inspections for construction are the responsibility of the permit holder or his agent.

This letter is being written to request a final inspection for fence permit issued on October 27, 2010.

Please contact this office within five (5) business days to schedule a final inspection so that we may close out the paperwork on this project.

If you should need any further assistance, please do not hesitate to contact me.

Sincerely,

Cathy Orth

Cathy Orth
Administrative Assistant
Code Enforcement

CALN TOWNSHIP
DEPARTMENT OF CODE ENFORCEMENT
Andrew F. Reczek, Director of Code Enforcement
Stephen L. Miller, Code Official / Fire Marshal
Raymond Stackhouse, Code Official / Deputy Fire Marshal
Joseph Arvay, Code Official / Housing Inspector
610.384.0600 fax: 610.384.0689 Email: andyr@calntownship.org
253 Municipal Drive, P.O. Box 72149 Thorndale, Pa 19372-0149
www.calntownship.org

March 8, 2011

Ms. Alison Balestra
3225 Tyning Lane
Downingtown, PA 19335

RE: Permit #2010-98
Fence

Dear Ms.Balestra:

Per Section R109.1 of the International Residential Code, inspections for construction are the responsibility of the permit holder or his agent.

This letter is being written to request a final inspection for fence permit issued on October 27, 2010.

Please contact this office within five (5) business days to schedule a final inspection so that we may close out the paperwork on this project.

If you should need any further assistance, please do not hesitate to contact me.

Sincerely,

Cathy Orth

Cathy Orth
Administrative Assistant
Code Enforcement

CALN TOWNSHIP

DEPARTMENT OF CODE ENFORCEMENT

Andrew F. Reczek, Director of Code Enforcement
Stephen L. Miller, Code Official / Fire Marshal
Raymond Stackhouse, Code Official / Deputy Fire Marshal
Joseph Arvay, Property Maintenance / Housing Inspector

www.calntownship.org

Phone: 610-384-0600 Ext. 145 Fax: 610-384-0689
Email: smiller@calntownship.org
253 Municipal Drive, P.O. Box 72149 Thorndale, Pa. 19372-0149

MISCELLANEOUS INSPECTION REPORT

DATE: 11/9/10

LOCATION: 3225 Twining Lane

TYPE OF INSPECTION: Fence site

- 5' Tall post & Rail
- Completely marked out per approved plot plan.
- Corner pins still in place from original house construction
- ok to continue - Final Inspection needed.

TOWNSHIP OF CALN
253 MUNICIPAL DR
THORNDALE, PA. 19372
610/384-0600

24 hrs. notice required for inspection scheduling

INSPECTION ASSIGNMENT SHEET

Building Permit No. 2010-00098-ZONP

Location 3225 TYNING LA, DOWNINGTOWN, PA 19335

Owner BALESTRA, ALISON

Contractor OWNER/APPLICANT

Description FENCE - SEE COPY OF PERMIT REVIEW LETTER ATTACHED

Comments SEE COPY OF PERMIT REVIEW LETTER ATTACHED

SITE INSPECTION PRIOR TO BEGINNING CONSTRUCTION

FINAL INSPECTION (performed after work is complete and PRIOR TO USING OR OCCUPYING CO

CALN TOWNSHIP
DEPARTMENT OF CODE ENFORCEMENT
Andrew F. Reczek, Director of Code Enforcement
Stephen L. Miller, Code Official / Fire Marshal
Raymond Stackhouse, Code Official / Deputy Fire Marshal
Joseph Arvay, Code Official / Housing Inspector
610.384.0600 fax: 610.384.0689 Email: andyr@calntownship.org
253 Municipal Drive, P.O. Box 72149 Thorndale, Pa 19372-0149
www.calntownship.org

October 27, 2010

Alison Pierce
3225 Tyning Lane
Downingtown, PA 19335

PERMIT REVIEW: Side / Rear Yard Fencing

1. All fencing located in a side or rear yard shall not exceed six (6) foot in overall height.
2. **It is the property owner's responsibility to provide locations of the deeded property corners to assure all structures are installed completely within these property lines and to further verify all structures meet the setback dimensions of the zoning district. If these locations cannot be established, a property survey will be required prior to installation in accordance with Section 155-115 C of the Caln Township Zoning Code**
3. **Fencing shall be installed so as to place the structure members towards the property being enclosed; thereby presenting the best appears towards the adjacent properties.**
4. Any Contractor performing a Home Improvement shall be properly registered with the Commonwealth of Pennsylvania Attorney General's office.

RECEIVED
OCT 26 2010
CODES

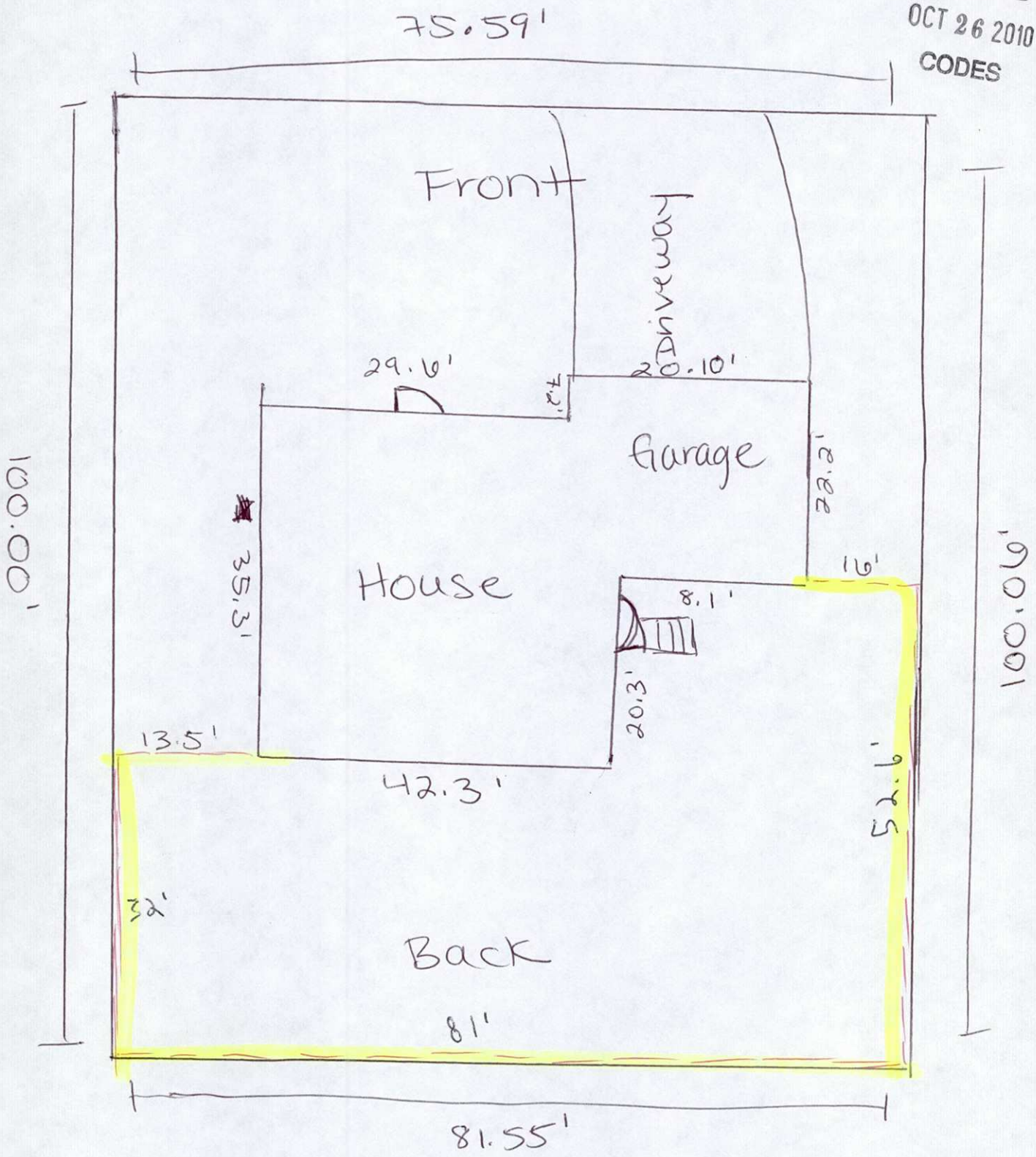

--- = Fence

RECEIVED
OCT 26 2010
CODES

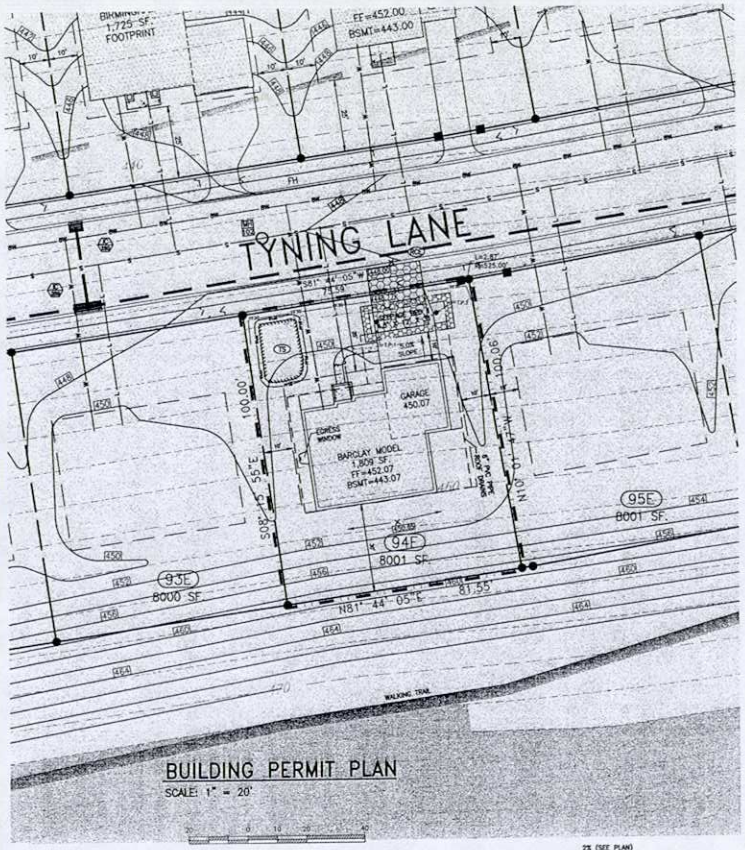

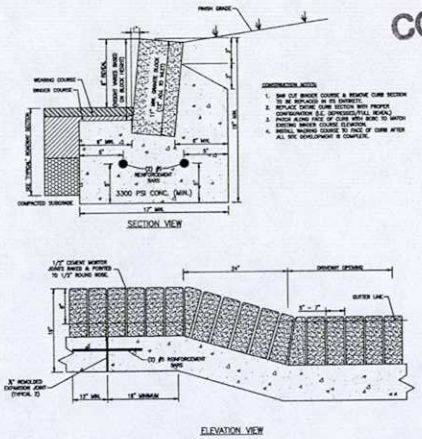

BELGIAN BLOCK CURB DEPRESSION RESTORATION DETAIL
NOT TO SCALE

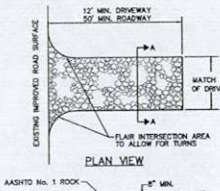

DESIGN:

(1) ROCK CONSTRUCTION ENTRANCES WILL BE CONSTRUCTED TO THE MINIMUM WIDTH LENGTH AND THICKNESS DIMENSIONS SHOWN ABOVE.

(2) ROCK WILL BE AASHTO NO.1 AS SPECIFIED IN SECTION 703.2 OF PA DOT PUBLICATION 408.

(3) FOR INSTALLATION ON CLAYEY OR POORLY DRAINED SOILS, A GEOTEXTILE FABRIC UNDERLAYMENT, OF A TYPE RECOMMENDED FOR SUCH APPLICATIONS BY THE MANUFACTURER, WILL BE USED.

CONSTRUCTION:

CONSTRUCTION WILL BE TO THE DIMENSIONS SHOWN ON THE CONSTRUCTION DRAWINGS.

MAINTENANCE:

THE STRUCTURE'S THICKNESS WILL BE CONSTANTLY MAINTAINED TO THE SPECIFIED DIMENSION BY ADDING ROCK. A STOCKPILE OF ROCK MATERIAL WILL BE MAINTAINED ON THE SITE FOR THIS PURPOSE. AT THE END OF EACH CONSTRUCTION DAY, ALL SEDIMENT DEPOSITED ON PUBLIC ROADWAYS, WILL BE REMOVED AND RETURNED TO THE CONSTRUCTION SITE. WASHING OF THE ROADWAY WITH WATER IS NOT PERMITTED.

STABILIZED CONSTRUCTION ENTRANCE
NOT TO SCALE

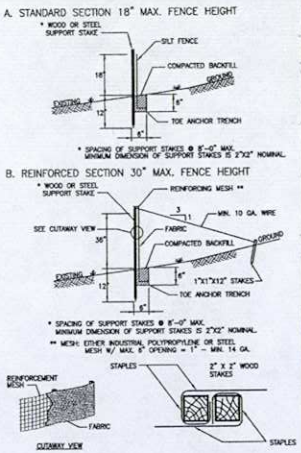

INSTALLATION:

1.) A TRENCH WILL BE PLOWED OR OTHERWISE EXCAVATED TO THE REQUIRED DEPTH (6" WIDE X 6" DEEP) WITH LITTLE, IF ANY, DISTURBANCE TO THE DOWNSLOPE SIDE OF THE TRENCH. THE BOTTOM OF THE TRENCH AND THE FENCE TOP WILL BE PLACED ON A LEVEL GRADE. WHICH IT IS NECESSARY TO CROSS SMALL DEPRESSIONS, THE TRENCH BOTTOM AND FENCE TOP EDGE MAY DEVIATE SLIGHTLY FROM THE LEVEL GRADE. GRADES IN SUCH SECTIONS WILL NOT EXCEED ONE PERCENT (1%). NOR WILL THE DEVIATION EXTEND FOR MORE THAN 25 FEET.

2.) SILT FENCING MUST BE INSTALLED PARALLEL TO EXISTING CONTOURS OR CONSTRUCTED LEVEL ALIGNMENTS. ENDS OF FENCING MUST BE EXTENDED 8 FEET, TRAVELING UPSWEEP AT 45 DEGREES TO THE ALIGNMENT OF THE MAIN FENCING SECTION.

3.) SUPPORT STAKES WILL BE DRIVEN TO THE REQUIRED DEPTH (12 INCHES) BELOW THE EXISTING GROUND SURFACE, AT SPECIFIED INTERVALS.

4.) STRETCH AND FASTEN FABRIC TO THE UPSLOPE SIDE OF THE SUPPORT STAKES (IF A REINFORCED SECTION, FASTEN REINFORCEMENT MESH PRIOR TO FASTENING THE FABRIC).

5.) WHERE ENDS OF FABRIC COME TOGETHER, THEY WILL BE OVERLAPPED, FOLDED AND STAPLED TO PREVENT SEDIMENT BYPASS.

6.) THE TOE ANCHOR WILL BE BACKFILLED AND COMPACTED TO A DENSITY EQUAL TO THE SURROUNDING SOILS.

7.) IF CONSTRUCTING A REINFORCED SECTION, ATTACH GUY WIRES TO SUPPORT STAKES. PROVISIONS SHOULD BE MADE FOR EASY LOOSENING AND REMOVAL OF THE GUY WIRES TO ALLOW FOR ACCESS TO PERFORM MAINTENANCE WORK.

MAINTENANCE:

1.) THE FENCE SHOULD BE INSPECTED AFTER EVERY PRECIPITATION EVENT. ANY NECESSARY REPAIRS WILL BE MADE IMMEDIATELY.

2.) SEDIMENT MUST BE REMOVED WHEN ACCUMULATIONS REACH 1/2 THE ABOVE GROUND HEIGHT OF THE FENCE.

3.) ALL UNDERCUTTING OR EROSION OF THE TOE ANCHOR WILL BE REPAIRED IMMEDIATELY WITH COMPACTED BACKFILL MATERIALS.

4.) ADHERE TO ANY MANUFACTURER'S RECOMMENDATIONS FOR REPLACING FILTER FABRIC FENCE DUE TO WEATHERING.

5.) ANY SILT FENCE SECTION WHICH HAS BEEN UNDERMINED OR TOPPED MUST BE IMMEDIATELY REPLACED WITH A ROCK FILTER OUTLET.

SILT FENCE DETAILS
NOT TO SCALE

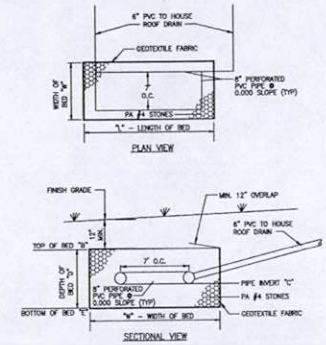

BED	"B" TOP OF BED	"C" PIPE INVERT	"E" BOTTOM OF BED	"L" LENGTH OF BED	"W" WIDTH OF BED	"D" DEPTH OF BED
1	447.27	445.27	442.77	31'	12'	4.5'

SEEPAGE BED DETAIL
NOT TO SCALE

1. SEEPAGE BED FILTER FABRIC AND STONE SHOULD BE KEPT CLEAN OF SOIL/SEDIMENT DURING THE INSTALLATION PROCESS. IF THE INSPECTION INDICATES THAT SOIL SEDIMENT HAS ENTERED THE INFILTRATION SEEPAGE BED, APPROPRIATE MEASURES (I.E. CLEANING THE SOIL/SEDIMENT FROM FABRIC, STONE, BED ETC. AND OR REPLACEMENT OF THE FABRIC AND STONE) SHOULD BE ADDRESSED.
2. ALL STONE FOR THE CONSTRUCTION OF THE SEEPAGE BED SHOULD BE UNIFORMLY GRADED AND CLEAN WASHED AGGREGATE.
3. THE BOTTOM OF ALL SEEPAGE BEDS SHALL BE UNDISTURBED OR UNCOMPACTED SUBGRADE.
4. SURROUND DISTRIBUTION PIPE WITH A MINIMUM OF 6" OF STONE.
5. IF GROUND WATER OR BEDROCK IS ENCOUNTERED DURING THE INSTALLATION OF THE SEEPAGE BED, THE SITE CONTRACTOR SHOULD IMMEDIATELY CONTACT THE DESIGN ENGINEER.
6. CLASS 4 GEOTEXTILE FABRIC SHALL BE PLACED ON ALL SIDES OF THE STONE.

SEEPAGE BED SIZE CALCULATIONS						
	"D" x	"W" x	"L" x	VOID RATIO =	CAPACITY	
REQUIRED:	4.5' x	12' x	30.53' x	0.35 =	577 cu.ft.±	
PROPOSED:	4.5' x	12' x	31' x	0.35 =	586 cu.ft.±	

TYPICAL ON-LOT CONSTRUCTION SEQUENCE

1. INSTALL SILT FENCE DOWNSLOPE OF ALL DISTURBED AREAS ON THE LOT.
2. EXCAVATE & INSTALL ON-LOT SEEPAGE BED.
3. INSTALL STABILIZED ROCK CONSTRUCTION ENTRANCE AT DRIVEWAY AS SHOWN.
4. CLEAR AND GRUB ALL TREES THAT NEED TO BE REMOVED IN ONLY THE AREAS OF THE HOUSE, DRIVEWAY AND RELATED GRADING.
5. EXCAVATE FOR DRIVEWAY AND BUILDING FOUNDATION. TOPSOIL WILL BE PLACED AT THE TEMPORARY STOCKPILE LOCATION AS SHOWN. UPON COMPLETION OF THE TOPSOIL REMOVAL, THE STOCKPILE WILL BE SEEDED AND MULCHED WITH TEMPORARY SEED MIX. STOCKPILE HEIGHTS MUST NOT EXCEED 35 FEET, AND SLOPES MUST BE 2:1 OR FLATTER.
6. CONSTRUCT DRIVEWAY, POUR BUILDING FOUNDATION, INSTALL SEWER AND WATER LATERALS AND ELECTRICAL SERVICE LINES AND CONSTRUCT HOUSE. ALL EROSION AND SEDIMENTATION CONTROL FACILITIES ARE TO REMAIN UNDISTURBED. RELOCATE DRIVEWAY APRON AND RESTORE BELGIAN BLOCK CURB/DEPRESSION PER SPECIFICATIONS (IF APPLICABLE). CURB RESTORATION & INSTALLATION SHALL REQUIRE INSPECTION BY TOWNSHIP CODES ENFORCEMENT OFFICER.
7. INSTALL ROOF DRAINS AND CONNECT TO SEEPAGE BED.
8. RESPREAD TOPSOIL AND FINE GRADE.
9. SEED AND MULCH ALL DISTURBED AREAS WITH PERMANENT SEED MIX. LANDSCAPE PER LANDSCAPE PLAN.
10. AFTER A PERMANENT VEGETATIVE COVER HAS BEEN ESTABLISHED OVER ALL DISTURBED AREAS, REMOVE THE EROSION AND SEDIMENTATION CONTROLS. SEED AND MULCH THE DISTURBED AREAS WITH PERMANENT SEED MIX.
11. PAVE THE DRIVEWAY WITH WEARING COURSE.

EROSION CONTROL LEGEND

FF18	18" SILT FENCE	TS	TOPSOIL STOCKPILE		15 TO 20% SLOPES
FF30	30" SILT FENCE	RCE	STABILIZED ROCK CONSTRUCTION ENTRANCE		20%+ SLOPES
SSF	SUPER SILT FENCE	IP	INLET PROTECTION		
	LIMIT OF DISTURBANCE				

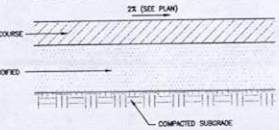

DRIVEWAY DETAIL
NOT TO SCALE

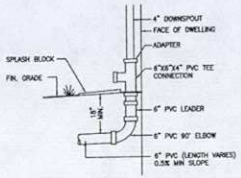

NOTE:
1. PVC WAY BE SUBSTITUTED WITH AN APPROVED EQUAL MATERIAL
2. LEAF GUARDS TO BE INSTALLED ON ALL GUTTER DOWNSPOUTS

DOWNSPOUT CONNECTION DETAIL
NOT TO SCALE

(*) - INDICATES 15% TO 20% SLOPES ARE PRESENT ON LOT.
(**) - INDICATES 20%+ SLOPES ARE PRESENT ON LOT.

ZONING DATA TABULATION
CALN TOWNSHIP

SECTION 155-136.J: CLUSTER DEVELOPMENT REGULATIONS
SINGLE-FAMILY DETACHED DWELLING UNITS:

	REQUIRED	PROPOSED
LOT AREA	8,000 SQUARE FEET (MINIMUM)	8,001 SQUARE FEET
LOT WIDTH	80 FEET	80 FEET±
BUILDING SETBACK	25 FEET	25 FEET±
REAR YARD	30 FEET	30 FEET±
SIDE YARD	10 FEET	15 FEET±
BUILDING HEIGHT	35 FEET	<35 FEET
BUILDING COVERAGE	30 PERCENT	22.81 PERCENT
LOT COVERAGE	40 PERCENT	30.36 PERCENT
-W/ 15% TO 20% SLOPES PRESENT	32 PERCENT	
-W/ 20%+ SLOPES PRESENT	28 PERCENT	

GENERAL NOTES:

1. BOUNDARY AND TOPOGRAPHICAL INFORMATION TAKEN FROM APPROVED SUBDIVISION PLANS, KNOWN AS "BAILEY STATION" SUBDIVISION & LAND DEVELOPMENT PLANS, PREPARED BY D.L.HOWELL & ASSOCIATES, DATED 8-21-02 AND LAST REVISED 8-14-04 & "LOT LINE REVISION PLAN OF BAILEY STATION", DATED 8-21-02 AND LAST REVISED 7-23-04, ALSO PREPARED BY D.L.HOWELL & ASSOCIATES, CERTIFIED CIVIL ENGINEERS AND LAND SURVEYORS.
2. THE PURPOSE OF THIS PLAN IS FOR APPROVAL OF A BUILDING PERMIT PLAN.
3. PROPOSED BUILDING FOUNDATION CORNERS SHALL BE STAKED BY A SURVEYOR TO ENSURE CONSTRUCTION WITHIN THE BUILDING SETBACK LINES.

LEGEND

EX. PROPERTY LINE	GE82 SOILS TYPE	EX. TELE. LINE		PROP. SEEPAGE BED	
PROP. PROPERTY LINE	SOILS LINE	PROP. TELE. LINE		EX. SANITARY SEWER LINE	
EX. RIGHT-OF-WAY	EX. CONC. CURB	EX. ELEC. LINE		PROP. SAN. SEWER LINE	
PROP. RIGHT-OF-WAY	PROP. CONC. CURB	PROP. ELEC. LINE		PROP. SAN. SEWER LATERAL	
EX. MONUMENT	EX. EDGE OF PAVING	EX. UTILITY POLE	MH	PROP. SANITARY MH. ID	
PROP. MONUMENT	PROP. EDGE OF PAVING	PROP. UTILITY POLE		EX. WATER LINE	
EX. IRON PIPE	EX. LIGHT POLE	EX. GUY ANCHOR		PROP. WATER LINE	
PROP. IRON PIPE	PROP. LIGHT POLE	EX. GAS LINE		PROP. WATER LATERAL	
EX. CENTERLINE	EX. FENCE	PROP. GAS LINE		PROP. FIRE WATER LINE	
PROP. EASEMENT	EX. WIRE FENCE	EX. GAS VALVE		EX. WATER VALVE	
EX. WETLANDS	EX. SIGN	PROP. GAS VALVE		PROP. WATER VALVE	
EXISTING CONTOUR	PROP. SIGN	EX. STORM SEWER LINE		EX. HYDRANT	
152 PROPOSED CONTOUR	EXIST. PARKING SPACES	PROP. STORM SEWER LINE		PROP. HYDRANT	
123.00 EXISTING SPOT ELEV.	PROP. PARKING SPACES	EX. STORM INLET		EX. MANHOLE	
x 123.00 NEW SPOT ELEV.	(TBR) TO BE REMOVED	PROP. STORM INLET		PROP. MANHOLE	
		PROP. STORM INLET ID			

DLHowell
Civil Engineering & Land Planning
www.DLHowell.com
1250 Wright's Lane
West Chester, PA 19380
Phone: (610) 918-9002
Fax: (610) 918-9003
312 West State Street
Suite B
Kennett Square, PA 19348
Phone: (610) 444-3836
Fax: (610) 444-3877
55 Country Club Drive
Suite 100
Downingtown, PA 19335
Phone: (610) 518-9111
Fax: (610) 518-9220

NO.	DATE	DESCRIPTION

BUILDING PERMIT PLAN
CLIENT: PROVIDENT HOMES, CORP.
PROJECT: LOT 94E
LOCATION: BAILEY STATION - EAST
CALN TOWNSHIP, CHESTER COUNTY, PA.

DATE:	5/27/09
SCALE:	1"=20'
DRAWN BY:	RBN
CHECKED BY:	BCK
PROJECT NO.:	2034
DIG. FILE:	2034\Permit Plans\lot 94
PLOTTED:	5/27/09
DRAWING NO.:	P-1
SHEET	1 OF 1

TOWNSHIP OF CALN

PERMIT

Permit No: 2010-00098-ZONP

Date Issued: 10/27/2010

Location of Work: 3225 TYNING LA

Type of Work: FENCE - SEE COPY OF PERMIT REVIEW LETTER ATTACHED

Owner: BALESTRA, ALISON

Contractor: OWNER/APPLICANT 610.466.9384

Parcel #:

ZONING OFFICER

THIS PLACARD MUST BE POSTED IN A CONSPICUOUS PLACE ON THE PREMISES, EASILY VISIBLE FROM THE PRINCIPAL STREET, WELL SECURED IF EXPOSED TO THE WEATHER, DURING THE ENTIRE CONSTRUCTION TIME.

WORK MUST BE STARTEDWITHIN 6 MONTHS FROM DATE OF ISSUE

Caln Township
253 Municipal Drive, Thorndale, PA 19372
610/384-0600, Fax 610/384-0689

RECEIVED
OCT 26 2010
CODES

ZONING PERMIT APPLICATION – PERMIT FEES ARE NON-REFUNDABLE.
Minimum fee due at time of permit application

Address 3225 Tyning Lane Downingtown, PA 19335 **Subdivision** _____ **Lot #** 94 **Zoning Dist.** R-3

IDENTIFICATION – To be completed by all applicants
OWNER and/or TENANT
Name: Alison Pierce
Address: 3225 Tyning Lane
Downingtown, PA 19335
Phone #: _____

Contractor Information: Effective 7/1/09 State Cert. # required: _____
Name: SELF
Address: _____
Phone #: _____

ZONING PERMITS

Fence/Wall	☑	Patio	☐
Forestry Grading	☐	Shed	☐
Sign	☐		

DATE: _____
JOB COST: _____

WALL **Type:** _____ **Hgt.** _____
(less than 4' in height)

No wall shall be erected within a floodway, street right-of-way, utility easement, drainage or sewer easement. Please show all easements that exist on your property.

Show location of wall in relation to structures.
Walls erected within the require front yard shall not exceed three (3) feet in height

FENCE **Type:** Post and Rail
Height: 5ft.

No fence shall be erected within a floodway, street right-of-way, utility easement, drainage or sewer easement. Please show all easements that exist on your property.

Show location of fence in relation to structures.

Fences erected within the required front yard shall not exceed five (5) feet.

SIGNS

Wall	☐	Special Event	☐
Freestanding	☐	(date of event)	_____
Banner	☐	Grand Opening	☐

Signs illuminated ☐ yes ☐ no
Existing Signs _____
Size of ea. Sign _____
Type of Signs _____
Bldg. Dimensions _____
Wall Frontage _____
Plot plan showing location of all signs(with dimensions) in relation to building and street right of way.

SHEDS (Less than 1000 Sq. Ft.) ☐

Size of Shed _____

Type of Shed		Type of foundation	
Wood	☐	Concrete Blocks	☐
Metal	☐	Gravel Bed	☐
		Concrete Slab	☐
		Other	☐

PATIO : Size _____ Type _____ Show location and distances to property line on detailed plot plan.
Plot plan must give dimensions of all structures (house, driveway, and other accessory structures)

SIGNATURE OF APPLICANT Alison Pierce Anthony Pierce DATE: 10/24/10

DO NOT WRITE IN THIS SPACE – FOR OFFICE USE ONLY

Permit # 98	Approved By: [signature]	Permit Fee: 50.00	Date Issued: 10/27/2010

REMARKS: See attached Review Comments

Date 10-26-10

Township of Caln
Receipt and Proof of Payment

Alison Balestra
CK 136
$55.00

GENERAL FUND

01-10-322-910 -- Police Services
01-10-322-900 -- Street Opening Fee
01-10-331-125 -- Vehicle/Speed Ctrl/Ordinance
01-10-361-305 -- Planning Fees
01-10-361-340 -- Zoning Hearing
01-10-362-410 -- Building Permit $55.00
01-10-362-415 -- Fire Inspection
01-10-362-452 -- U & O Res & Com
01-10-362-601 -- Housing Annual Rental Fee
01-10-362-602 -- Housing Tenant change Fee
01-10-362-610 -- Contractor License Fee
01-10-363-700 -- Bus Shelters
01-10-380-100 -- Miscellaneous
01-10-380-105 -- Tax Certification Fees
01-10-380-110 -- Cell Tower Fees
01-10-387-305 -- Parks/Pavilions
01-10-387-309 -- Recreation Programs
01-_____ --
01-_____ --
01-_____ --
01-_____ --

PAID
OCT 26 2010
CODES

SEWER FUND

08-10-364-824 -- Inspection Fees
08-_____ --
08-_____ --

OTHER FUNDS

Fence · 3225 Tyning

Department HDR

Finance

Date 10-26-10

Township of Caln
Receipt and Proof of Payment

Alison Balestra
CK 136
$55.00

GENERAL FUND

01-10-322-910 -- Police Services
01-10-322-900 -- Street Opening Fee
01-10-331-125 -- Vehicle/Speed Ctrl/Ordinance
01-10-361-305 -- Planning Fees
01-10-361-340 -- Zoning Hearing
01-10-362-410 -- Building Permit $55.00
01-10-362-415 -- Fire Inspection
01-10-362-452 -- U & O Res & Com
01-10-362-601 -- Housing Annual Rental Fee
01-10-362-602 -- Housing Tenant change Fee
01-10-362-610 -- Contractor License Fee
01-10-363-700 -- Bus Shelters
01-10-380-100 -- Miscellaneous
01-10-380-105 -- Tax Certification Fees
01-10-380-110 -- Cell Tower Fees
01-10-387-305 -- Parks/Pavilions
01-10-387-309 -- Recreation Programs
01-_____ --
01-_____ --
01-_____ --
01-_____ --

PAID
OCT 26 2010
CODES

SEWER FUND

08-10-364-824 -- Inspection Fees
08-_____ --
08-_____ --

OTHER FUNDS

Fence -3225 Tyning

Department HJR

Finance

CALN TOWNSHIP

Department of Code Enforcement

Andrew F. Reczek, Director of Code Enforcement
Stephen L.Miller, Code Official/Fire Marshal
Raymond Stackhouse, Code Official/Deputy Fire Marshal
Joseph Arvay, Property Maintenance/Housing Inspector
610-384-0600 fax: 610-384-0689 Email: andyr@calntownship.org
253 Municipal Drive, P.O. Box 72149 Thorndale, Pa. 19372-0149

www.calntownship.org

RECEIVED
OCT 26 2010
CODES

PROTOCOL FOR ZONING PERMIT SUBMITTAL

1. **The Zoning Officer has thirty (30) days to review applications.**
2. **Pennsylvania Home Improvement Contractor License number required.**
3. **Two set of plans must accompany submitted application with cross sections and details.**
4. **Provide plot plan showing all existing & proposed construction. No application will be accepted without the above information. Provide setback dimensions from any structure (new or existing) or paved surface to all property lines.**
5. **The minimum fee will be collected at time of application. Caln Township Code Official will calculate total fee. Any additional fees will be collected prior to issuance of Permit. Fee schedule is available on line @ www.calntownship.org.**
6. **Forestry applications – No permit required for up to four (4) trees per acre.**
7. **Forestry applications – Please provide two (2) detailed plot plans showing extent of forestry/grading. Plot plan must show property dimensions as well as all structures (if any) located on same with distances to property line. The applicant must also show limits of disturbances as it pertains to existing structures. Locate all easements, swales, berms, etc. that exist on the property and indicate location of erosion and sedimentation control measures to be used.**
8. **Walls (under 4' in height) only require a zoning permit.**
9. **Sign permit shall include plot plan. Building dimension with size & location of all new and existing signs. Freestanding signs – show height.**
10. **Caln Township reserves the right to reject any permit application that does not comply with above referenced requirements.**
11. **Patio permits- Show location and distances to property line on detailed plot plan. Plot plan must give dimensions of all structures (house, driveway, and other accessory structures)**

Signature of applicant Alison Pierce Anthony Pierce

Date 10/24/10

Date 10-26-10

Township of Caln
Receipt and Proof of Payment

Alison Balestra
CK 136
$55.00

GENERAL FUND

01-10-322-910 -- Police Services
01-10-322-900 -- Street Opening Fee
01-10-331-125 -- Vehicle/Speed Ctrl/Ordinance
01-10-361-305 -- Planning Fees
01-10-361-340 -- Zoning Hearing
01-10-362-410 -- Building Permit $55.00
01-10-362-415 -- Fire Inspection
01-10-362-452 -- U & O Res & Com
01-10-362-601 -- Housing Annual Rental Fee
01-10-362-602 -- Housing Tenant change Fee
01-10-362-610 -- Contractor License Fee
01-10-363-700 -- Bus Shelters
01-10-380-100 -- Miscellaneous
01-10-380-105 -- Tax Certification Fees
01-10-380-110 -- Cell Tower Fees
01-10-387-305 -- Parks/Pavilions
01-10-387-309 -- Recreation Programs
01-_____ --
01-_____ --
01-_____ --
01-_____ --

PAID
OCT 26 2010
CODES

SEWER FUND

08-10-364-824 -- Inspection Fees
08-_____ --
08-_____ --

OTHER FUNDS

Fence -3225 Tyning

Department HDR

Finance

TOWNSHIP OF CALN
253 MUNICIPAL DR
THORNDALE, PA. 19372
610-384-0600

CERTIFICATE OF OCCUPANCY

Building Permit No.: 15-00468

Zoning District: R-3

Permission is hereby given:

RUYLE KEVIN R & ROBIN K
(owner of use)

3229 TYNING LANE, DOWNINGTOWN
owner (new)

CHESTER COUNTY MASONARY
contractor

Use Type: R RESIDENTIAL

(Lot & Development)

REMARKS

At: 3229 TYNING LA

Description: PATIO 143 SQ. FT.

8/17/2015
Building Inspector DATE

Andrew F. Reczek
Zoning Officer/Building Code Official DATE 8/14/15

IN ACCORDANCE WITH 2009 IRC

APPROVED AS TO COMPLIANCE
WITH ZONING ORDINANCE.

SCANNED
SEP 15 2015
ELECTRONICALLY FILED

Caln Township
253 Municipal Drive, Thorndale, PA 19372
610/384-0600, Fax 610/384-0689

RECEIVED MAY 14 2015 CALN TWP.

ZONING PERMIT APPLICATION – PERMIT FEES ARE NON-REFUNDABLE.

PROPERTY LOCATION 3229 Tyning LN.

DATE: 5/6/15

PLOT PLAN REQUIRED. Plan shall include dimensions of all structures (house, driveway, & other accessory structures in relation to property lines, street right-of-way and any easements.

Lot Area 8000 sq. ft.
Building Coverage 1808 sq. ft.
Total Impervious Coverage 2879 = 35.97% sq. ft.

REQUIRED INFORMATION

Contractor Information: PA. Lic. # 052255
Name: Chester County Masonry
Address: 18 Circle Ave
West Chester PA 19382
Phone #: 610-637-9025

REQUIRED INFORMATION

OWNER and/or TENANT
Name: Robin Ruyle
Address: 3229 TYNING LN.
Phone #:

SIGNS
Wall ☐ Special Event ☐
Freestanding ☐ (date of event)
Banner ☐ Grand Opening ☐
Signs illuminated ☐ yes ☐ no

Existing Signs
Size of ea. Sign
Type of Signs
Dimensions
Wall Frontage

Patio ☑ Size ~~432~~ 146 sq.f
Type PAVER

Shed ☐ Size

Forestry Grading ☐
(Provide forestry management & E & S plan)

WALL **Type:** CMU/veneer **Hgt.** 20 IN.
(less than 4' in height)
Provide material detail

FENCE **Type:**
Height:
Provide material detail

No wall shall be erected within a floodway, street right-of-way, utility easement, drainage or sewer easement. Please show all easements that exist on your property

SIGNATURE OF APPLICANT **DATE:** 5/6/15

DO NOT WRITE IN THIS SPACE – FOR OFFICE USE ONLY

Permit # 15-468 | Approved By: | Permit Fee: 55.00

Date Issued: 6/11/2015 | Zoning District: R3

REMARKS: See attached Review Comments

VIII. Impervious Coverage Worksheet

For Caln Township Use and Record of Project Area

Property Owner's Name Robin & Kevin Ruyle

Address of Property 3229 TYNING LN. Downington PA

Parcel ID # 39-4-764.0 Phone Number [redacted]

Total Project Area of Disturbance (square feet) 432 A

Previously Installed Impervious Coverage Since January 1, 2014 0 B

Total Project Area of New Impervious Surface Being Proposed 432 C

Total Cumulative Impervious Coverage Installed since January 1, 2014 432 D (B+C)

Stormwater Management Submission Type:
- [X] Exempt
- [ ] Minor Stormwater Site Plan
- [ ] Stormwater Site Plan

Total New Impervious Area Since January 1, 2014 432 (Same as D above)
(This value to be used for "Previous Impervious Area prior to January 1, 2014 for subsequent permit applications".)

Acknowledgement - I declare that I am the property owner, or representative of the owner, and that the information provided is accurate to the best of my knowledge. I understand that stormwater may not adversely affect adjacent properties or be directed onto another property without written permission. I also understand that false information may result in a stop work order or revocation of permits. Municipal representatives are also granted reasonable access to the property for review and/ or inspection of this project if necessary.

Signature [signature] Date 5/11/15

Printed Name: Bruce A Ruller Jr

This form to be filled out for all projects requiring a Building Permit.

CALN TOWNSHIP
253 Municipal Drive
Thorndale, PA 19372
610-384-0600
www.calntownship.org
jmcclintock@calntownship.org

Township Use Only	
Date Received:	
Address:	
PIN:	
PAGE 1 OF 2	

STORMWATER MANAGEMENT/GRADING/EROSION CONTROL PERMIT APPLICATION

Tax Parcel ID: 39- 4 - 764.0 Date: _____

Property Owner(s): Royle, Kevin & Robin Zoning District: _____

Property Address: 3229 Tyning Phone Number: _____

Email Address: _____

Project Description: Installation of a Paver Patio + 8 ft CMU/Veneer Sitting wall

1. Is this work associated with a building permit? ☑ Yes ☐ No
2. Is the application part of an approved subdivision and/or land development with stormwater management? ☐ Yes ☑
3. Does the proposed work involve replacement of existing impervious coverage? ☐ Yes ☑ No
4. If the answer to 3 is "yes", please indicate the amount of square footage proposed to be replaced: _____
5. Are there any flooding/water quality issues in the surrounding properties or Township Right-of-Way?

If yes, please describe below:

Area of Lot (square feet): 8,000 SF.

Total Project Area of Earth Disturbance (square feet):	432	A
Previously Installed Impervious Coverage since January 1, 2014 (square feet):	0	B
Total Project Area of New Impervious Surface Being Proposed (square feet):	432	C
Total Cumulative Impervious Coverage installed since January 1, 2014:	432	D (B+C)

1. If "A" is less than 5,000 square feet and "D" is less than 1,000 square feet, no stormwater controls are required.
2. If either "A" is greater than 5,000 square feet and/or "D" is greater than 1,000 square feet, go to step 3.
3. If "A" is less than 10,000 square feet and "D" is less than 2,000 square feet, on site stormwater controls may be done without consultation of a Professional Engineer. However, if either "A" is greater than 10,000 square feet and/or "D" is greater than 2,000 square feet, a full stormwater drainage plan and calculations shall be required in accordance with Chapter 136 of the Township Ordinance.

CALN TOWNSHIP
253 Municipal Drive
Thorndale, PA 19372
610-384-0600
www.calntownship.org
jmcclintock@calntownship.org

Township Use Only	
Date Received:	
Address:	
PIN:	
PAGE 2 OF 2	

STORMWATER MANAGEMENT/GRADING/EROSION CONTROL PERMIT APPLICATION

Tax Parcel ID: Y 39-4-764.0

Property Owner(s): Kevin + Robin Ruyle

Property Address: 3229

If Applicable

Contractor Name:	Chester County Masonry	Engineer Name:	
Address:	18 Circle Ave W.C PA	Address:	
Email Address:	BruceE@ChesterCountyMasonry.com	Email Address:	
Phone Number:	610 637-9025	Phone Number:	

Property Owner Acknowledgement - I declare that I am the property owner, or authorized representative of the owner. I understand that stormwater may not adversely affect adjacent properties or be directed onto another property without written permission. I also understand that false information may result in a stop work order or revocation of permits. Municipal representatives are also granted reasonable access to the property for review and/ or inspection of this project if necessary.

By signing this Application, I certify that all facts in the Applicant and all accompanying documentation are true and correct. This Application is being made by me to induce official action on the part of the Township, and I understand that any false statements made herein are being made subject to the penalties of 18 Pa. C.S. §4904 relating to unsworn falsification to authorities.

I expressly acknowledge that the issuance of any approval under the Storm Water Management Ordinance is based upon the facts stated and representations made in this Application. I expressly acknowledge that the Township may revoke any permit or approval if the regulated activity for which it has been issued violates any applicable Township, County, State or Federal law or regulation. I also expressly acknowledge that the Township may revoke any permit or approval based on this Application if it has been issued in error or if issuance was based upon any misrepresentations or errors contained in the Application or otherwise made by the Applicant.

Nothing contained in this Application shall be construed to relieve or limit the obligations of the Applicant to comply with all provisions of the Zoning Ordinance or to waive violations of the Zoning Ordinance or any other Township Ordinances or to stop the Township from enforcing Township ordinances, including but not limited to the Zoning Ordinance. I expressly acknowledge that permits and certificates of use and occupancy may be required under the Zoning Ordinance and it is my obligation to obtain all permits and approvals under the Zoning Ordinance. I acknowledge that the escrow which I may be required to post shall be used to reimburse the Township for all engineering and inspection fees and for all attorneys' fees incurred in connection with the preparation and recording of any required Storm Water Management Agreement, the review of Financial Security, and any other legal expenses which the Township may incur in the furtherance of the work proposed by this Application. I hereby irrevocably authorize the Township to withdraw from time to time any monies posted as escrow. In the event the posted escrow is insufficient at any time to pay such costs, or the Township does not require the posting of an escrow and fees are incurred, the Township shall bill Applicant for the actual or anticipated additional costs. In the event the posted escrow is in excess of the Township's costs, the Township shall refund such excess monies, without interest, to Applicant upon completion of the work and final inspection.

Signature of Owner: [signature] Date: 5/10/15

Printed Name: Bruce A Fuller Jr.

ACORD®

CERTIFICATE OF LIABILITY INSURANCE

DATE (MM/DD/YYYY): 07/30/14

THIS CERTIFICATE IS ISSUED AS A MATTER OF INFORMATION ONLY AND CONFERS NO RIGHTS UPON THE CERTIFICATE HOLDER. THIS CERTIFICATE DOES NOT AFFIRMATIVELY OR NEGATIVELY AMEND, EXTEND OR ALTER THE COVERAGE AFFORDED BY THE POLICIES BELOW. THIS CERTIFICATE OF INSURANCE DOES NOT CONSTITUTE A CONTRACT BETWEEN THE ISSUING INSURER(S), AUTHORIZED REPRESENTATIVE OR PRODUCER, AND THE CERTIFICATE HOLDER.

IMPORTANT: If the certificate holder is an ADDITIONAL INSURED, the policy(ies) must be endorsed. If SUBROGATION IS WAIVED, subject to the terms and conditions of the policy, certain policies may require an endorsement. A statement on this certificate does not confer rights to the certificate holder in lieu of such endorsement(s).

PRODUCER		
Westtown Insurance Group, Inc. 1548 Mcdaniel Drive West Chester, PA 19380 Phone (610) 738-9400 Fax (610) 738-9404	CONTACT NAME: DAVIS PEARSON PHONE (A/C, No, Ext): (610) 738-9400 FAX (A/C, No): (610) 738-9404 E-MAIL ADDRESS: raymond@westtowninsurance.com	
	INSURER(S) AFFORDING COVERAGE	NAIC #
	INSURER A : DONEGAL INSURANCE	13692
INSURED	INSURER B :	
CHESTER COUNTY MASONRY	INSURER C :	
18 CIRCLE AVENUE	INSURER D :	
WEST CHESTER, PA 19382 (610) 637-9025	INSURER E :	
	INSURER F :	

COVERAGES CERTIFICATE NUMBER: REVISION NUMBER:

THIS IS TO CERTIFY THAT THE POLICIES OF INSURANCE LISTED BELOW HAVE BEEN ISSUED TO THE INSURED NAMED ABOVE FOR THE POLICY PERIOD INDICATED. NOTWITHSTANDING ANY REQUIREMENT, TERM OR CONDITION OF ANY CONTRACT OR OTHER DOCUMENT WITH RESPECT TO WHICH THIS CERTIFICATE MAY BE ISSUED OR MAY PERTAIN, THE INSURANCE AFFORDED BY THE POLICIES DESCRIBED HEREIN IS SUBJECT TO ALL THE TERMS, EXCLUSIONS AND CONDITIONS OF SUCH POLICIES. LIMITS SHOWN MAY HAVE BEEN REDUCED BY PAID CLAIMS.

INSR LTR	TYPE OF INSURANCE	ADDL INSR	SUBR WVD	POLICY NUMBER	POLICY EFF (MM/DD/YYYY)	POLICY EXP (MM/DD/YYYY)	LIMITS	
A	GENERAL LIABILITY ☑ COMMERCIAL GENERAL LIABILITY ☐ CLAIMS-MADE ☑ OCCUR GEN'L AGGREGATE LIMIT APPLIES PER: ☑ POLICY ☐ PRO-JECT ☐ LOC			QC 18822128	07/30/2014	07/30/2015	EACH OCCURRENCE	$ 1,000,000.00
							DAMAGE TO RENTED PREMISES (Ea occurrence)	$ 100,000.00
							MED EXP (Any one person)	$ 5,000.00
							PERSONAL & ADV INJURY	$ 1,000,000.00
							GENERAL AGGREGATE	$ 2,000,000.00
							PRODUCTS - COMP/OP AGG	$ 2,000,000.00
								$
	AUTOMOBILE LIABILITY ☐ ANY AUTO ☐ ALL OWNED AUTOS ☐ SCHEDULED AUTOS ☐ HIRED AUTOS ☐ NON-OWNED AUTOS						COMBINED SINGLE LIMIT (Ea accident)	$
							BODILY INJURY (Per person)	$
							BODILY INJURY (Per accident)	$
							PROPERTY DAMAGE (Per accident)	$
								$
	☐ UMBRELLA LIAB ☐ OCCUR ☐ EXCESS LIAB ☐ CLAIMS-MADE ☐ DED ☐ RETENTION $						EACH OCCURRENCE	$
							AGGREGATE	$
								$
	WORKERS COMPENSATION AND EMPLOYERS' LIABILITY Y / N ANY PROPRIETOR/PARTNER/EXECUTIVE OFFICER/MEMBER EXCLUDED? ☐ N / A (Mandatory in NH) If yes, describe under DESCRIPTION OF OPERATIONS below						☐ WC STATU-TORY LIMITS ☐ OTH-ER	
							E.L. EACH ACCIDENT	$
							E.L. DISEASE - EA EMPLOYE	$
							E.L. DISEASE - POLICY LIMIT	$

DESCRIPTION OF OPERATIONS / LOCATIONS / VEHICLES (Attach ACORD 101, Additional Remarks Schedule, if more space is required)

CERTIFICATE HOLDER

CANCELLATION

SHOULD ANY OF THE ABOVE DESCRIBED POLICIES BE CANCELLED BEFORE THE EXPIRATION DATE THEREOF, NOTICE WILL BE DELIVERED IN ACCORDANCE WITH THE POLICY PROVISIONS.

AUTHORIZED REPRESENTATIVE

© 1988-2010 ACORD CORPORATION. All rights reserved.
The ACORD name and logo are registered marks of ACORD

ACORD

CERTIFICATE OF LIABILITY INSURANCE

DATE (MM/DD/YYYY) 06/25/14

THIS CERTIFICATE IS ISSUED AS A MATTER OF INFORMATION ONLY AND CONFERS NO RIGHTS UPON THE CERTIFICATE HOLDER. THIS CERTIFICATE DOES NOT AFFIRMATIVELY OR NEGATIVELY AMEND, EXTEND OR ALTER THE COVERAGE AFFORDED BY THE POLICIES BELOW. THIS CERTIFICATE OF INSURANCE DOES NOT CONSTITUTE A CONTRACT BETWEEN THE ISSUING INSURER(S), AUTHORIZED REPRESENTATIVE OR PRODUCER, AND THE CERTIFICATE HOLDER.

IMPORTANT: If the certificate holder is an ADDITIONAL INSURED, the policy(ies) must be endorsed. If SUBROGATION IS WAIVED, subject to the terms and conditions of the policy, certain policies may require an endorsement. A statement on this certificate does not confer rights to the certificate holder in lieu of such endorsement(s).

PRODUCER

Westtown Insurance Group, Inc.
1548 Mcdaniel Drive
West Chester, PA 19380
Phone (610) 738-9400 Fax (610) 738-9404

CONTACT NAME:
PHONE (A/C, No, Ext): (610) 738-9400 FAX (A/C, No): (610) 738-9404
E-MAIL ADDRESS: raymond@westtowninsurance.com

INSURER(S) AFFORDING COVERAGE	NAIC #
INSURER A :	
INSURER B :	
INSURER C :	
INSURER D : THE HARTFORD	11000
INSURER E :	
INSURER F :	

INSURED

CHESTER COUNTY MASONRY
18 CIRCLE AVENUE
WEST CHESTER PA 19382

COVERAGES CERTIFICATE NUMBER: REVISION NUMBER:

THIS IS TO CERTIFY THAT THE POLICIES OF INSURANCE LISTED BELOW HAVE BEEN ISSUED TO THE INSURED NAMED ABOVE FOR THE POLICY PERIOD INDICATED. NOTWITHSTANDING ANY REQUIREMENT, TERM OR CONDITION OF ANY CONTRACT OR OTHER DOCUMENT WITH RESPECT TO WHICH THIS CERTIFICATE MAY BE ISSUED OR MAY PERTAIN, THE INSURANCE AFFORDED BY THE POLICIES DESCRIBED HEREIN IS SUBJECT TO ALL THE TERMS, EXCLUSIONS AND CONDITIONS OF SUCH POLICIES. LIMITS SHOWN MAY HAVE BEEN REDUCED BY PAID CLAIMS.

INSR LTR	TYPE OF INSURANCE	ADDL INSR	SUBR WVD	POLICY NUMBER	POLICY EFF (MM/DD/YYYY)	POLICY EXP (MM/DD/YYYY)	LIMITS	
	GENERAL LIABILITY						EACH OCCURRENCE	$
	☐ COMMERCIAL GENERAL LIABILITY						DAMAGE TO RENTED PREMISES (Ea occurrence)	$
	☐ ☐ CLAIMS-MADE ☐ OCCUR						MED EXP (Any one person)	$
	☐						PERSONAL & ADV INJURY	$
	☐						GENERAL AGGREGATE	$
	GEN'L AGGREGATE LIMIT APPLIES PER:						PRODUCTS - COMP/OP AGG	$
	☐ POLICY ☐ PRO-JECT ☐ LOC							$
	AUTOMOBILE LIABILITY						COMBINED SINGLE LIMIT (Ea accident)	$
	☐ ANY AUTO						BODILY INJURY (Per person)	$
	☐ ALL OWNED AUTOS ☐ SCHEDULED AUTOS						BODILY INJURY (Per accident)	$
	☐ HIRED AUTOS ☐ NON-OWNED AUTOS						PROPERTY DAMAGE (Per accident)	$
	☐ ☐							$
	☐ UMBRELLA LIAB ☐ OCCUR						EACH OCCURRENCE	$
	☐ EXCESS LIAB ☐ CLAIMS-MADE						AGGREGATE	$
	☐ DED ☐ RETENTION $							$
D	WORKERS COMPENSATION AND EMPLOYERS' LIABILITY						☑ WC STATU-TORY LIMITS ☐ OTH-ER	
	ANY PROPRIETOR/PARTNER/EXECUTIVE OFFICER/MEMBER EXCLUDED? (Mandatory in NH) Y/N Y	N/A		44WECBS7116	06/25/14	06/25/15	E.L. EACH ACCIDENT	$ 100,000.00
	if yes, describe under DESCRIPTION OF OPERATIONS below						E.L. DISEASE - EA EMPLOYE	$ 100,000.00
							E.L. DISEASE - POLICY LIMIT	$ 500,000.00

DESCRIPTION OF OPERATIONS / LOCATIONS / VEHICLES (Attach ACORD 101, Additional Remarks Schedule, if more space is required)

CERTIFICATE HOLDER

CANCELLATION

SHOULD ANY OF THE ABOVE DESCRIBED POLICIES BE CANCELLED BEFORE THE EXPIRATION DATE THEREOF, NOTICE WILL BE DELIVERED IN ACCORDANCE WITH THE POLICY PROVISIONS.

AUTHORIZED REPRESENTATIVE

© 1988-2010 ACORD CORPORATION. All rights reserved.
The ACORD name and logo are registered marks of ACORD

CALN TOWNSHIP
DEPARTMENT OF CODE ENFORCEMENT
Andrew F. Reczek, Director of Code Enforcement
Raymond Stackhouse, Code Official / Deputy Fire Marshal
Joseph Arvay, Code Official / Housing Inspector
Jason Ostrum, Code Official
610.384.0600 fax: 610.384.0689 Email: areczek@calntownship.org
253 Municipal Drive, P.O. Box 72149 Thorndale, Pa 19372-0149
www.calntownship.org

May 20, 2015

Robin Ruyle
3229 Tyning Lane
Downingtown, PA 19335

RE: Zoning (patio) Permit Application

Dear Ms. Ruyle;

This letter is to inform you that your current permit application cannot be approved as submitted. Our review found that the allowable impervious coverage will be exceeded with the installation of the proposed patio.

Your property was constructed under the Cluster Development requirements of the Caln Township Zoning Code. Those standards limit the impervious coverage of any lot to not more than 40%. However, your property is also encumbered by steep slopes which further limits the total coverage to not more than 32%. Unfortunately, the addition of a 432 square foot patio will increase your lot coverage to 35.5%.

As a result, please either reduce the size of the patio so the total lot coverage does not exceed 32% or you will need to file a variance application with the Caln Township Zoning Hearing Board. Please understand that when variance relief is being sought, the applicant will be asked to establish the hardship requirements found in Section 155-170 D of our Zoning Code. A variance application has been attached for your convenience.

Please understand that no construction activity is permitted until additional information is provided by you or a variance is approved by our Zoning Hearing Board. Please feel free to contact me in the event you have any questions or concerns.

Sincerely,

Andrew F. Reczek
Director / Zoning Officer

cc: Jeffrey W. McClintock, PE. Township Engineer
File

Spoke to Mrs. Ruyle 5/27/2015 to explain Lot coverage + zoning requirements

Approved coverage @ Building permit approved 7/17/2012 = 2,409 or 30.1%

32% of 8,000 = 2,560

Patio could be 151 sq. ft by rights
otherwise variance is required

Return call 5/28 to again explain maximum size + variance requirements

717-684-4400 (259)
949-390-3642 cell

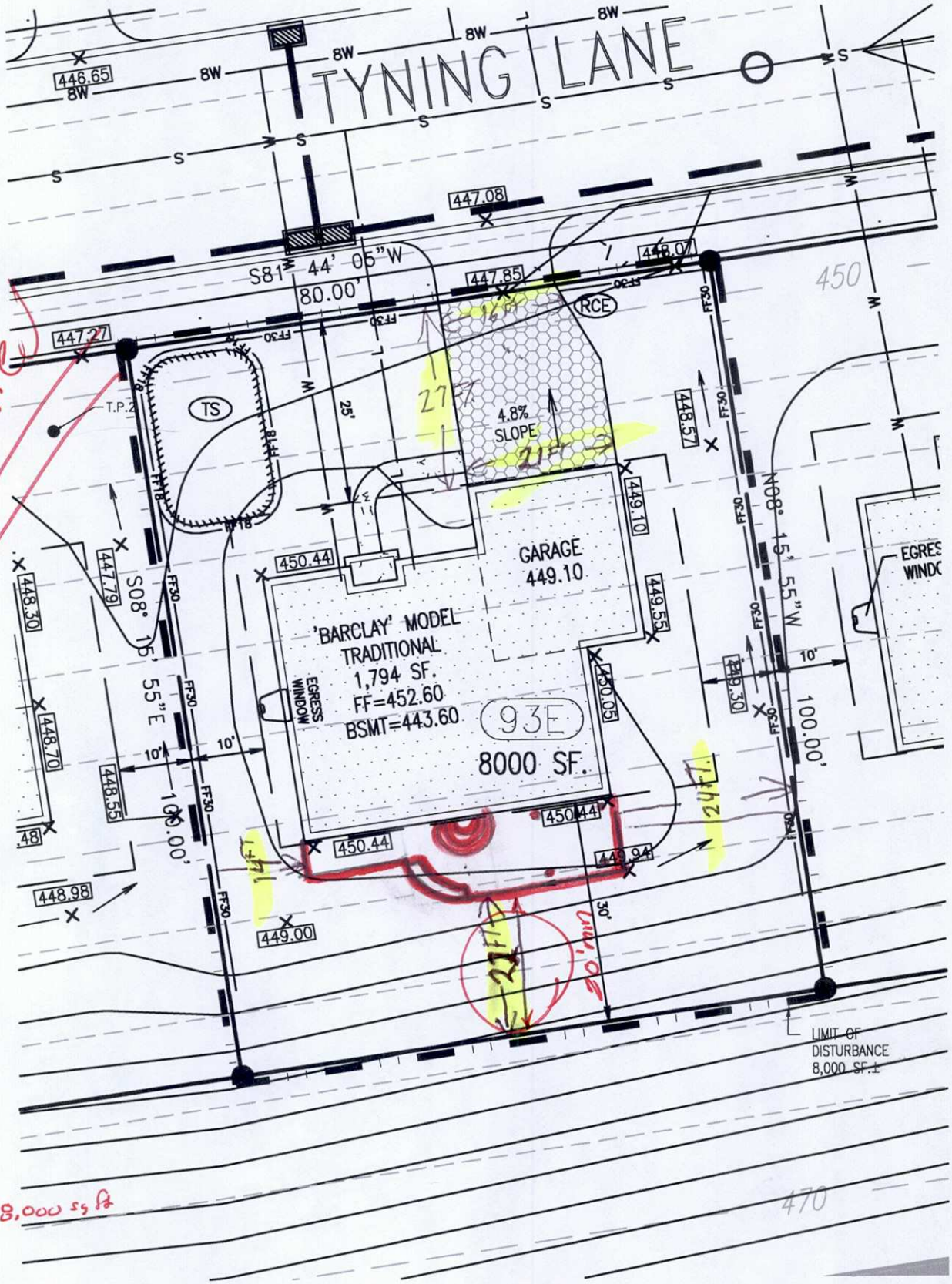

Lot Area = 8,000 sq ft

R-3
Steep Slopes max 32% imp. coverage
Previously approved coverage 2,409 sq ft = 2841 ÷ 8000 = 35 %
432
New =

Act 167 = 1,000 sq. − 432 = 568 sq. ft

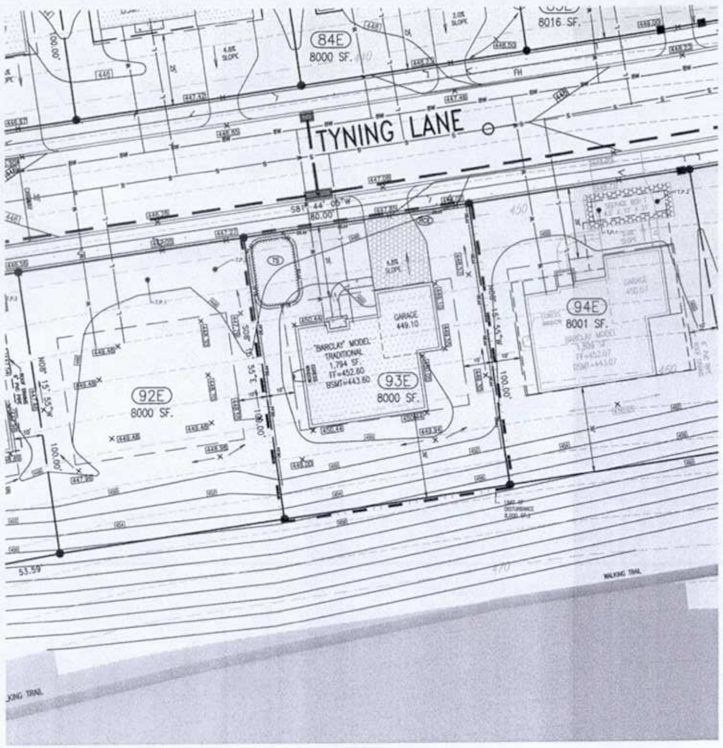

BUILDING PERMIT PLAN

SCALE: 1" = 20'

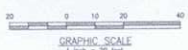

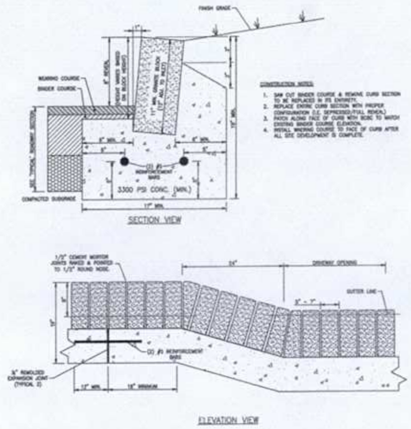

BELGIAN BLOCK CURB DEPRESSION RESTORATION DETAIL

NOT TO SCALE

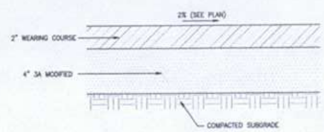

DRIVEWAY DETAIL

NOT TO SCALE

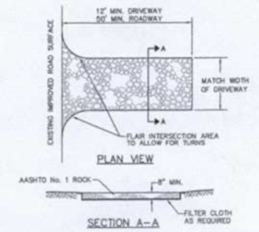

DESIGN:

(1) ROCK CONSTRUCTION ENTRANCES WILL BE CONSTRUCTED TO THE MINIMUM WIDTH LENGTH AND THICKNESS DIMENSIONS SHOWN ABOVE.

(2) ROCK WILL BE AASHTO NO.1 AS SPECIFIED IN SECTION 703.2 OF PA DOT PUBLICATION 408.

(3) FOR INSTALLATION ON CLAYEY OR POORLY DRAINED SOILS, A GEOTEXTILE FABRIC UNDERLAYMENT, OF A TYPE RECOMMENDED FOR SUCH APPLICATIONS BY THE MANUFACTURER, WILL BE USED.

CONSTRUCTION:

CONSTRUCTION WILL BE TO THE DIMENSIONS SHOWN ON THE CONSTRUCTION DRAWINGS.

MAINTENANCE:

THE STRUCTURE'S THICKNESS WILL BE CONSTANTLY MAINTAINED TO THE SPECIFIED DIMENSION BY ADDING ROCK. A STOCKPILE OF ROCK MATERIAL WILL BE MAINTAINED ON THE SITE FOR THIS PURPOSE. AT THE END OF EACH CONSTRUCTION DAY, ALL SEDIMENT DEPOSITED ON PUBLIC ROADWAYS, WILL BE REMOVED AND RETURNED TO THE CONSTRUCTION SITE. WASHING OF THE ROADWAY WITH WATER IS NOT PERMITTED.

STABILIZED CONSTRUCTION ENTRANCE

NOT TO SCALE

TYPICAL ON-LOT CONSTRUCTION SEQUENCE

1. INSTALL SILT FENCE DOWNSLOPE OF ALL DISTURBED AREAS ON THE LOT.
2. INSTALL STABILIZED ROCK CONSTRUCTION ENTRANCE AT DRIVEWAY AS SHOWN.
3. CLEAR AND GRUB ALL TREES THAT NEED TO BE REMOVED IN ONLY THE AREAS OF THE HOUSE, DRIVEWAY AND RELATED GRADING.
4. EXCAVATE FOR DRIVEWAY AND BUILDING FOUNDATION. TOPSOIL WILL BE PLACED AT THE TEMPORARY STOCKPILE LOCATION AS SHOWN. UPON COMPLETION OF THE TOPSOIL REMOVAL, THE STOCKPILE WILL BE SEEDED AND MULCHED WITH TEMPORARY SEED MIX. STOCKPILE HEIGHTS MUST NOT EXCEED 35 FEET, AND SLOPES MUST BE 2:1 OR FLATTER.
5. RELOCATE DRIVEWAY APRON AND RESTORE BELGIAN BLOCK CURB/DEPRESSION PER SPECIFICATIONS (IF APPLICABLE). CURB RESTORATION & INSTALLATION SHALL REQUIRE INSPECTION BY TOWNSHIP CODES ENFORCEMENT OFFICER. CONSTRUCT DRIVEWAY, POUR BUILDING FOUNDATION, INSTALL SEWER AND WATER LATERALS AND ELECTRICAL SERVICE LINES AND CONSTRUCT HOUSE. ALL EROSION AND SEDIMENTATION CONTROL FACILITIES ARE TO REMAIN UNDISTURBED.
6. RESPREAD TOPSOIL AND FINE GRADE.
7. SEED AND MULCH ALL DISTURBED AREAS WITH PERMANENT SEED MIX. LANDSCAPE PER LANDSCAPE PLAN.
8. AFTER A PERMANENT VEGETATIVE COVER HAS BEEN ESTABLISHED OVER ALL DISTURBED AREAS, REMOVE THE EROSION AND SEDIMENTATION CONTROLS. SEED AND MULCH THE DISTURBED AREAS WITH PERMANENT SEED MIX.
9. PAVE THE DRIVEWAY WITH WEARING COURSE.

A. STANDARD SECTION 18" MAX. FENCE HEIGHT

B. REINFORCED SECTION 30" MAX. FENCE HEIGHT

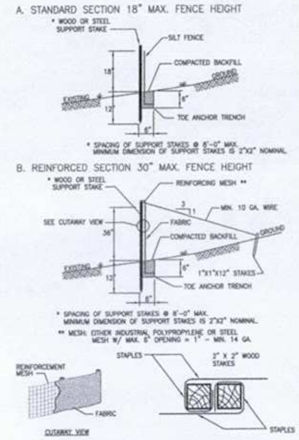

INSTALLATION:

1.) A TRENCH WILL BE PLOWED OR OTHERWISE EXCAVATED TO THE REQUIRED DEPTH (6" WIDE X 6" DEEP) WITH LITTLE, IF ANY, DISTURBANCE TO THE DOWNSLOPE SIDE OF THE TRENCH. THE BOTTOM OF THE TRENCH AND THE FENCE TOP WILL BE PLACED ON A LEVEL GRADE. WHEN IT IS NECESSARY TO CROSS SMALL DEPRESSIONS, THE TRENCH BOTTOM AND FENCE TOP EDGE MAY DEVIATE SLIGHTLY FROM THE LEVEL GRADE. GRADES IN SUCH SECTIONS WILL NOT EXCEED ONE PERCENT (1%), NOR WILL THE DEVIATION EXTEND FOR MORE THAN 25 FEET.

2.) SILT FENCING MUST BE INSTALLED PARALLEL TO EXISTING CONTOURS OR CONSTRUCTED LEVEL ALIGNMENTS. ENDS OF FENCING MUST BE EXTENDED 8 FEET, TRAVELING UPSWEEP AT 45 DEGREES TO THE ALIGNMENT OF THE MAIN FENCING SECTION.

3.) SUPPORT STAKES WILL BE DRIVEN TO THE REQUIRED DEPTH (12 INCHES) BELOW THE EXISTING GROUND SURFACE, AT SPECIFIED INTERVALS.

4.) STRETCH AND FASTEN FABRIC TO THE UPSLOPE SIDE OF THE SUPPORT STAKES (IF A REINFORCED SECTION, FASTEN REINFORCEMENT MESH PRIOR TO FASTENING THE FABRIC).

5.) WHERE ENDS OF FABRIC COME TOGETHER, THEY WILL BE OVERLAPPED, FOLDED AND STAPLED TO PREVENT SEDIMENT BYPASS.

6.) THE TOE ANCHOR WILL BE BACKFILLED AND COMPACTED TO A DENSITY EQUAL TO THE SURROUNDING SOILS.

7.) IF CONSTRUCTING A REINFORCED SECTION, ATTACH GUY WIRES TO SUPPORT STAKES. PROVISIONS SHOULD BE MADE FOR EASY LOOSENING AND REMOVAL OF THE GUY WIRES TO ALLOW FOR ACCESS TO PERFORM MAINTENANCE WORK.

MAINTENANCE:

1.) THE FENCE SHOULD BE INSPECTED AFTER EVERY PRECIPITATION EVENT. ANY NECESSARY REPAIRS WILL BE MADE IMMEDIATELY.

2.) SEDIMENT MUST BE REMOVED WHEN ACCUMULATIONS REACH 1/2 THE ABOVE GROUND HEIGHT OF THE FENCE.

3.) ALL UNDERCUTTING OR EROSION OF THE TOE ANCHOR WILL BE REPAIRED IMMEDIATELY WITH COMPACTED BACKFILL MATERIALS.

4.) ADHERE TO ANY MANUFACTURER'S RECOMMENDATIONS FOR REPLACING FILTER FABRIC FENCE DUE TO WEATHERING.

5.) ANY SILT FENCE SECTION WHICH HAS BEEN UNDERMINED OR TOPPED MUST BE IMMEDIATELY REPLACED WITH A ROCK FILTER OUTLET.

SILT FENCE DETAILS

NOT TO SCALE

ZONING DATA TABULATION

CALN TOWNSHIP

SECTION 155-136.J: CLUSTER DEVELOPMENT REGULATIONS

SINGLE-FAMILY DETAHCED DWELLING UNITS:

	REQUIRED	PROPOSED
LOT AREA	8,000 SQUARE FEET (MINIMUM)	8,000 SQUARE FEET
LOT WIDTH	80 FEET	80 FEET±
BUILDING SETBACK	25 FEET	25 FEET±
REAR YARD	30 FEET	30 FEET±
SIDE YARD	10 FEET	13 FEET±
BUILDING HEIGHT	35 FEET	<35 FEET
BUILDING COVERAGE	30 PERCENT	22.43 PERCENT
LOT COVERAGE	40 PERCENT	29.98 PERCENT (*)
–W/ 15% TO 20% SLOPES PRESENT	32 PERCENT	
–W/ 20%+ SLOPES PRESENT	28 PERCENT	

(*) – INDICATES 15% TO 20% SLOPES ARE PRESENT ON LOT.
(**) – INDICATES 20%+ SLOPES ARE PRESENT ON LOT.

GENERAL NOTES:

1. BOUNDARY AND TOPOGRAPHICAL INFORMATION TAKEN FROM APPROVED SUBDIVISION PLANS, KNOWN AS "BAILEY STATION" SUBDIVISION & LAND DEVELOPMENT PLANS, PREPARED BY D.L.HOWELL & ASSOCIATES, DATED 8-21-02 AND LAST REVISED 6-14-04 & "LOT LINE REVISION PLAN OF BAILEY STATION", DATED 8-21-02 AND LAST REVISED 7-23-04, ALSO PREPARED BY D.L.HOWELL & ASSOCIATES, CERTIFIED CIVIL ENGINEERS AND LAND SURVEYORS.
2. THE PURPOSE OF THIS PLAN IS FOR APPROVAL OF A BUILDING PERMIT PLAN.
3. PROPOSED BUILDING FOUNDATION CORNERS SHALL BE STAKED BY A SURVEYOR TO ENSURE CONSTRUCTION WITHIN THE BUILDING SETBACK LINES.

EROSION CONTROL LEGEND

- FF18 — 18" SILT FENCE
- FF30 — 30" SILT FENCE
- SSF — SUPER SILT FENCE
- LIMIT OF DISTURBANCE
- (TS) TOPSOIL STOCKPILE
- (RCE) STABILIZED ROCK CONSTRUCTION ENTRANCE
- (IP) INLET PROTECTION

LEGEND

- PROP. PROPERTY LINE
- PROP. RIGHT-OF-WAY
- PROP. MONUMENT
- PROP. IRON PIPE
- PROP. EASEMENT
- PROPOSED CONTOUR
- NEW SPOT ELEV.
- 15 TO 20% SLOPES
- PROP. CONC. CURB
- PROP. EDGE OF PAVING
- PROP. LIGHT POLE
- PROP. SIGN
- PROP. PARKING SPACES
- TO BE REMOVED
- 20%+ SLOPES
- PROP. TELE. LINE
- PROP. ELEC. LINE
- PROP. UTILITY POLE
- PROP. GAS LINE
- PROP. GAS VALVE
- PROP. STORM SEWER LINE
- PROP. STORM INLET
- PROP. STORM INLET ID
- PROP. SEEPAGE BED
- PROP. SAN. SEWER LINE
- PROP. SAN. SEWER LATERAL
- PROP. SANITARY MH. ID
- PROP. WATER LINE
- PROP. WATER LATERAL
- PROP. FIRE WATER LINE
- PROP. WATER VALVE
- PROP. HYDRANT
- PROP. MANHOLE

DLHowell
Civil Engineering & Land Planning
www.DLHowell.com
1250 Wright's Lane
West Chester, PA 19380
Phone: (610) 918-9002
Fax: (610) 918-9003

REV.	DATE	DESCRIPTION
1	08/27/12	REVISED FINISH FLOOR ELEVATION PER CLIENT REQUEST.

BUILDING PERMIT PLAN

CLIENT: PROVIDENT HOMES, CORP.
PROJECT: LOT 93E
LOCATION: BAILEY STATION – EAST CALN TOWNSHIP, CHESTER COUNTY, PA.

DATE:	07/10/2012
SCALE:	1"=20'
DRAWN BY:	RBV
CHECKED BY:	BDK
PROJECT NO.:	2034
CAD FILE:	2034\Permit Plans
PLOTTED:	08/27/2012
DRAWING NO.:	P-1
SHEET	1 of 1

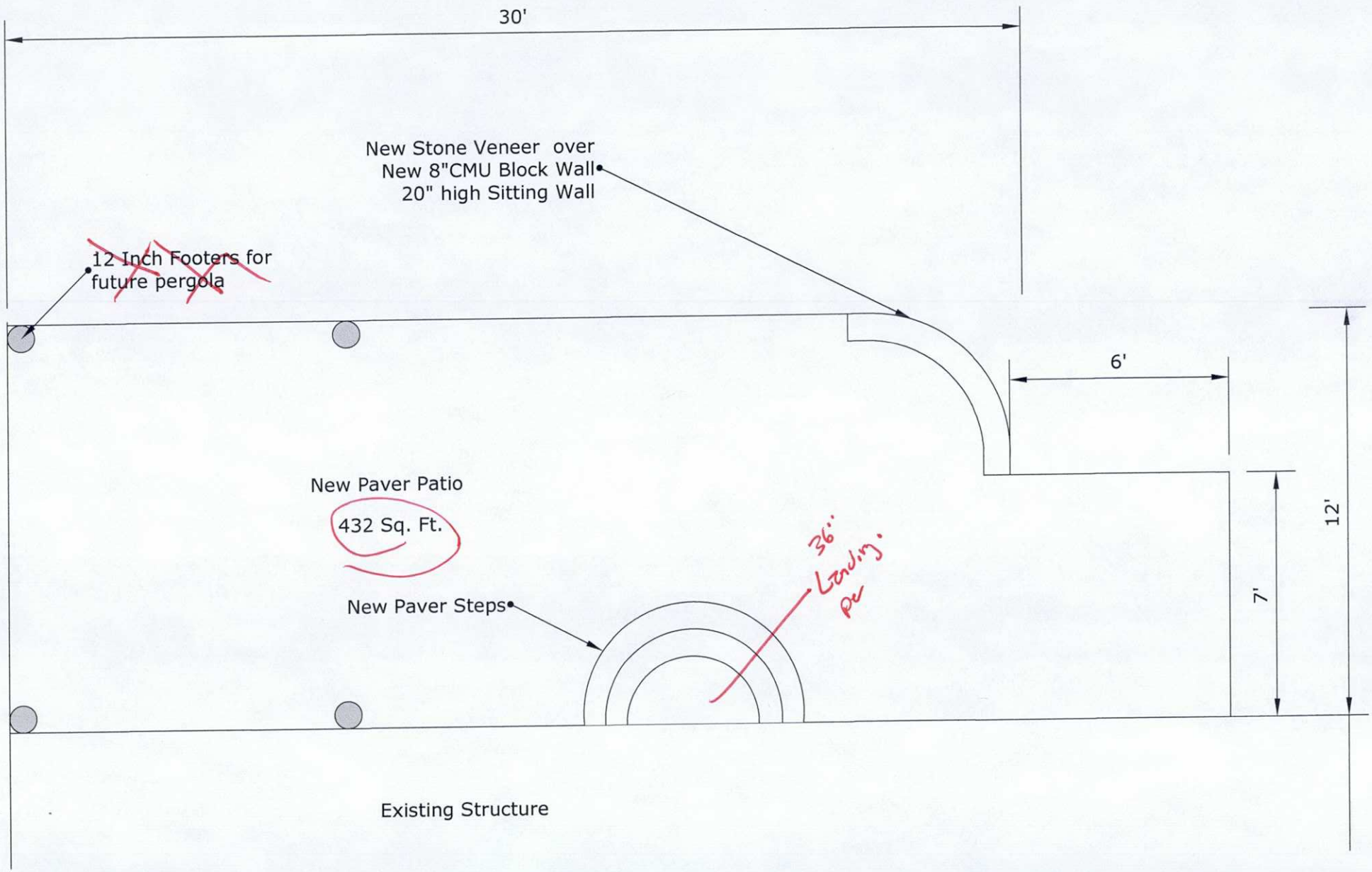
30'
New Stone Veneer over
New 8"CMU Block Wall
20" high Sitting Wall
12 Inch Footers for
future pergola
6'
12'
7'
New Paver Patio
432 Sq. Ft.
New Paver Steps
36" Landing pa
Existing Structure

CALN TOWNSHIP

DEPARTMENT OF CODE ENFORCEMENT

Andrew F. Reczek, Director of Code Enforcement
Stephen L. Miller, Code Official/Fire Marshal
Raymond Stackhouse, Code Official/Deputy Fire Marshal
Joseph Arvay, Property Maintenance, Housing Inspector
610-384-0600 fax: 610-384-0689 Email: areczek@calntownship.org
253 Municipal Drive, P.O. Box 72149 Thorndale, Pa. 19372-0149

www.calntownship.org

RECEIVED
MAY 14 2015
CALN TWP.

#55 220

RECEIVED
MAY 14 2015
CALN TWP.

PROTOCOL FOR ZONING PERMIT SUBMITTAL

1. **Provide plot plan showing all existing & proposed construction No application will be accepted without the above information. Provide setback dimensions from any structure (new or existing, ie – sheds, walls < 4 ft., deck < 30", fences, signs) or paved surface to all property lines.**

2. **Sign permit shall include plot plan. Building dimension with size & location of all new and existing signs. Freestanding signs – show height.**

3. **The minimum fee will be collected at time of application. Caln Township Code Official will calculate total fee. Any additional fees will be collected prior to issuance of Permit. Fee schedule is available on line @ www.calntownship.org**

4. **Caln Township reserves the right to reject any permit application that does not comply with above referenced requirements**

5. **The Zoning Officer has thirty (30) days to review applications.**

6. **Pennsylvania Home Improvement Contractor License number required.**

7. **Forestry Application - Please provide two (2) detailed plot plans showing extent of forestry/grading. Plot plan must show property dimensions as well as all structures (if any) located on same with distances to property line. The applicant must also show limits of disturbances as it pertains to existing structures. Locate all easements, swales, berms, etc. that exist on the property and indicate location of erosion and sedimentation control measures to be used.**

Signature of applicant X _____

Date X 5/6/15

Caln Township
Caln Twp. Municipal Authority
253 Municipal Drive
Thorndale,PA 19372

INVOICE #
15-00437

INVOICE DATE: 05/14/15
DUE DATE: 06/13/15

PAID
MAY 14 2015
CODES

ACCOUNT ID: CCMASONA
CHESTER COUNTY MASONARY
18 CIRCLE AV
WEST CHESTER, PA 19382

PERMIT INFORMATION
PERMIT NO: 15-00468
LOCATION: 3229 TYNING LA

QUANTITY/UNIT	SERVICE ID	DESCRIPTION	UNIT PRICE	AMOUNT
		Permit No: 15-00468		
1.0000	RC-PATIO	PATIO Permit No: 15-00468	55.00000	55.00
			TOTAL DUE:	$ 55.00

PAYMENT COUPON - PLEASE DETACH AND RETURN THIS PORTION ALONG WITH YOUR PAYMENT

Caln Township
Caln Twp. Municipal Authority
253 Municipal Drive
Thorndale,PA 19372

INVOICE #: 15-00437
DESCRIPTION: Permit No: 15-00468
ACCOUNT ID: CCMASONA
DUE DATE: 06/13/15
TOTAL DUE: $ 55.00

CHESTER COUNTY MASONARY
18 CIRCLE AV
WEST CHESTER, PA 19382

CALN TOWNSHIP

DEPARTMENT OF ENGINEERING

Jeffrey W. McClintock, PE, CFM, Township Engineer
Cheryl A. Lafferty, Administrative Assistant

www.calntownship.org

610-384-0600 fax: 610-384-3245 Email: jmcclintock@calntownship.org
253 Municipal Drive, P.O. Box 72149 Thorndale, Pa. 19372-0149

Protocol for Stormwater Management, Grading, and/or Erosion Control Permit Submittal

1. Unless exempted by Section 88 of the Township Code, all activities proposing disturbance to the topography and/or vegetation of a property is required to obtain a Stormwater Management, Grading, Erosion, and Sediment Control Permit (hereinafter "Permit").

2. All projects that are proposing earth disturbance and/or impervious coverage changes shall fill out the attached Impervious Coverage Worksheet (provided with all Zoning and Building Permit Applications).

3. Once this information is reviewed and verified, if either the Total Project Area of Earth Disturbance is greater than 5,000 square feet and/or the Total Cumulative Impervious Coverage Installed since January 1, 2014 is greater than 1,000 square feet, a completed Permit Application shall be submitted for review by the Township Engineer.

4. The Applicant shall review the Stormwater Management Simplified Approach Design Assistance Manual (available at either the Township Office or the Township Website) and then schedule a meeting with the Township Engineer.

5. Once the approach desired by the Applicant has been decided, an Application with the required documentation shall be submitted for review. The Permit Application is Form-Fillable and is available on the Township's Website.

6. At a minimum, a copy of the Building Permit Application or Zoning Permit Application, along with the associated plot plan/construction plan, shall be included with the Permit Application.

7. The minimum fee will be colected at the time of Permit Application. This fee is established by the Resolution of the Board of Commissioners and is available at the Township Office or on the Township Website.

8. As provided for in the Township's Stormwater Management Ordinance (Chapter 136), the Applicant shall reimburse all expenses incurred by the Township for any plan review, construction inspection, and legal assistance associated with the Permit. The Township may require the establishment of an escrow account for these anticipated costs or said costs will be invoiced to the Applicant by the Township.

Release 2.2 www.chesco.org Help Login

Metadata

ChescoViews

Print Find Street Find Intersection

Map Scale: 55 Feet

Find Parcel By: Address Owner UPI PIN

Results | Address

Clear All

- Find Address (1)
  - 2771 - LINCOLN HW (1)
    - SAI CALN REALTY LLC 2771 LINCOLN HW, CALN

Summary	SAI CALN REALTY LLC 2771 LINCOLN HW, CALN
PARID	3904 009401B0
UPI	39-4-94.1B
Owner 1	SAI CALN REALTY LLC
Owner 2	
Mailing Address 1	81 MARGIL FARM DR
Mailing Address 2	DOWNINGTOWN PA
Mailing Address 3	
ZIP Code	19335
Deed Book	8086
Deed Page	837
Deed Recorded Date	12/30/2010
Legal Desc 1	NS OF RT 30
Legal Desc 2	LOT 1 & RESTAURANT
Acres	
Square Feet	25004
Land Use (Asmnt)	C-30
Class	C
Lot Assessment	$87,510
Property Assessment	$119,690
Total Assessment	$207,200
Last Sale Price	$370,000
Assessment Date	12/19/2014
Property Address	2771 LINCOLN HW
Municipality	CALN
Street Concat	2771 LINCOLN HW
Fair Mkt Val Act 319	
Fair Mkt Val Act 515	
School District	COATESVILLE AREA

more..

Map Contents

- PARCEL DIMENSIONS
  - Parcel Dimensions 600
  - Parcel Dimensions 1000
- PARCELS
  - Township Parcels

CALN TOWNSHIP
DEPARTMENT OF CODE ENFORCEMENT
Andrew F. Reczek, Director of Code Enforcement
Stephen L. Miller, Code Official / Fire Marshal
Raymond Stackhouse, Code Official / Deputy Fire Marshal
Joseph Arvay, Code Official / Housing Inspector
610.384.0600 fax: 610.384.0689 Email: areczek@calntownship.org
253 Municipal Drive, P.O. Box 72149 Thorndale, Pa 19372-0149
www.calntownship.org

FIELD CORRECTION NOTICE

PROJECT ADDRESS 3229 Tyning Ln **LOT #**

INSPECTION DATE 7/29/15

PERMIT #

OWNER, AGENT, CONTRACTOR EMAIL; Robin Ruyle

THE FOLLOWING ITEMS WERE FOUND IN VIOLATION OF THE CALN TOWNSHIP BUILDING OR PROPERTY MAINTENANCE CODE. ALL IDENTIFIED VIOLATIONS MUST BE CORRECTED BY THE OWNER, CONTRACTOR, OR AGENT. THE RESPONSIBLE INDIVIDUAL SHALL BE REQUIRED TO SCHEDULE A REINSPECTION PRIOR TO THE TIMEFRAME ESTABLISHED BELOW, ANY FURTHER CONSTRUCTION ACTIVITY OR USE AND OCCUPANCY APPROVAL;

PROVIDE TEXT BOX

1) patio was approved for 146 sf.ft. However installed as12' x 14' totaling 168 sq.ft. This will marginally exceed the allowable impervious lot coverage. 30% permitted 32% installed - Reduced to 11' x 13' Totaling 143 sq. ft. - OK 8/14/15

2) grading appears to trap storm water along the south east property line. Regrade accordingly - OK 8/14/15

OK to Issue

REINSPECTION REQUIRED NO LATER THAN: Prior to occupany

INSPECTOR: Andrew Reczek

Note; Inspections shall be scheduled allowing a minimum of 24-hour advanced Notice. Inspection shall be scheduled by calling 610-384-0600 Ext. 119 or 120 between the hours of 8:00 AM and 4:30 PM Monday – Friday.

CALN TOWNSHIP
DEPARTMENT OF CODE ENFORCEMENT
Andrew F. Reczek, Director of Code Enforcement
Raymond Stackhouse, Code Official / Deputy Fire Marshal
Joseph Arvay, Code Official / Housing Inspector
Jason Ostrum, Code Official
610.384.0600 fax: 610.384.0689 Email: areczek@calntownship.org
253 Municipal Drive, P.O. Box 72149 Thorndale, Pa 19372-0149
www.calntownship.org

June 11, 2015

Robin Ruyle
3229 Tyning Lane
Downingtown, PA 19335

PERMIT REVIEW: **Patio / 146 sq.ft**

1. It is the property owner's responsibility to provide locations of the deeded property corners to assure all structures are installed completely within the property lines and to further verify all structures meet the setback dimensions of the zoning district. If these locations cannot be established, a property survey will be required prior to installation in accordance with Section 155-115 C of the Caln Township Zoning Code

2. Any grading required for the newly proposed patio and shed structure shall not redirect storm water onto adjacent properties.

3. **Patio structure shall maintain a minimum ten (10) foot side yard and twenty (20) foot rear yard setback from the adjacent property lines in accordance with the R-3 Zoning requirements and section 155-116 A (5)**

4. **This permit allows an impervious coverage of 31.9%; Maximum 32% due to steep slopes. In accordance with ACT 167 a maximum of eight-hundred and fifty-four (854) sq.ft of additional impervious coverage is permitted without additional onsite storm water management.**

5. **A landing shall be provided at any exterior door where more than 2 stair risers are necessary in accordance with Section R311 of the 2009 International Residential Code.**

6. **Inspections shall be scheduled by calling 610-384-0600 (ext 119 or 136) and allowing a minimum of 24-hr advanced notice. Required inspections are as follows; 1) site prior to patio placement once property lines are established and 2) Final**

7/29
Previous Coverage - 2409
New Patio 168
2,577
8000 = 32.2%

7/29
14 x 12 installed
Landing provide
Stair riser 6" max with 2/8"
Grading is questionable + could hold water on east side

CALN TOWNSHIP

DEPARTMENT OF ENGINEERING & CODE ENFORCEMENT

Andrew F. Reczek, Director of Code Enforcement
Raymond Stackhouse, Code Official / Deputy Fire Marshal
Joseph Arvay, Property Maintenance/Housing Inspector
Jason Ostrum, Code Official

www.calntownship.org

610-384-0600 fax: 610-384-0689 Email: andyr@calntownship.org
253 Municipal Drive, P.O. Box 72149 Thorndale, Pa. 19372-0149

MISCELLANEOUS INSPECTION REPORT

DATE: 6/18/15

LOCATION: 3229 Tyning Ln

TYPE OF INSPECTION: Patio -Site

10'+ on side yard set backs 22' on rear yard

12'x12' area for pavers

Ok given to move forward with the project

3229 Tyning Ln.

RECEIVED
JUN 01 2015
CALN TWP.

RECEIVED
JUN 01 2015
CALN TWP.

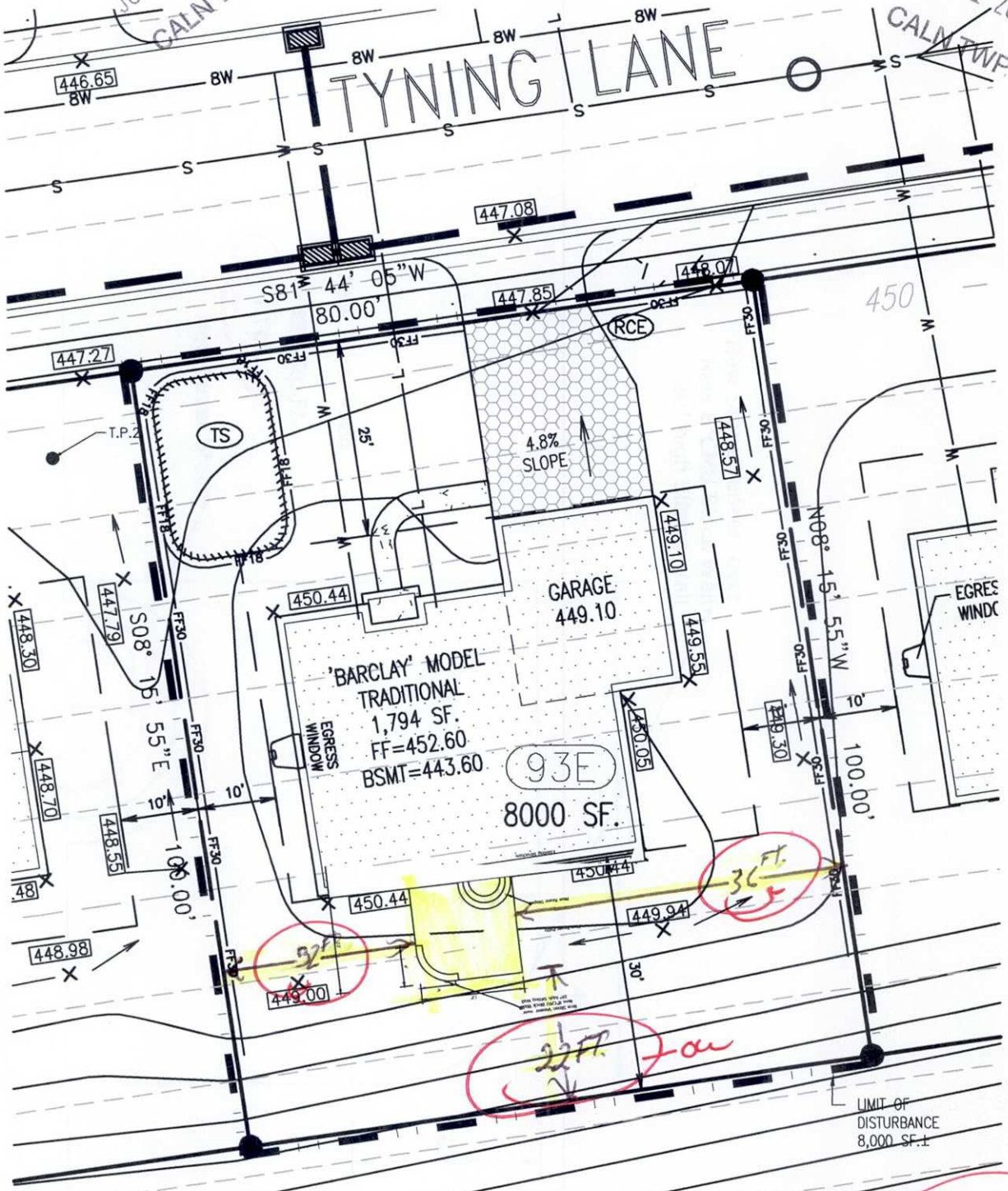

Steep Slope ~~max~~ 32%

470

Township Approved Copy

R-3 Cluster Dev.

Previous coverage = 2409 = 2,555
New 146 ÷ 8,000 = 31.9%

Act 167 = 1,000 - 146 = 854 sq. ft remain 6/11/2015

TOWNSHIP OF CALN

PERMIT

Permit No: 15-00468

Date Issued: 06/11/15

Location of Work: 3229 TYNING LA

Type of Work: PATIO/146 SQ. FT.

PLEASE SCHEDULE THE FOLLOWING INSPECTIONS:

1. SITE (PRIOR TO PATIO PLACEMENT)
2. FINAL

610.384.0600 EXT 220 24 HR NOTICE

Owner: RUYLE KEVIN R & ROBIN K

Contractor: CHESTER COUNTY MASONARY

Parcel #: 39-4-764.0

Andrew F. Reczek

ZONING OFFICER

THIS PLACARD MUST BE POSTED IN A CONSPICUOUS PLACE ON THE PREMISES, EASILY VISIBLE FROM THE PRINCIPAL STREET, WELL SECURED IF EXPOSED TO THE WEATHER, DURING THE ENTIRE CONSTRUCTION TIME.

WORK MUST BE STARTEDWITHIN 6 MONTHS FROM DATE OF ISSUE

TOWNSHIP OF CALN
253 MUNICIPAL DR
THORNDALE, PA. 19372
610/384-0400

CERTIFICATE OF OCCUPANCY

Building Permit No. 2011-00045-ZONP

UCC Certificate of Occupancy No. 8781

REMARKS

Zoning District R3

Permission is hereby given:

BALESTRA, ALISON
(owner of use)

ALISON BALESTRA
owner (new)

OWNER/APPLICANT
contractor

Use Type: PATIO & DECK

LOT #94 BAILEY STATION NORTHGATE
(Lot & Development)

At: 3225 TYNING LA, DOWNINGTOWN, PA 19335

For: RESIDENTIAL ACCESSORY STRUCTURE - PATIO & DECK

9/6/11
Building Inspector DATE

9/7/2011
Zoning Officer/Building Code Official DATE

IN COMPLIANCE WITH 2009 IBC CODES

APPROVED AS TO COMPLIANCE WITH ZONING ORDINANCE.

SCANNED
SEP 22 2011
ELECTRONICALLY FILED

3225 Tyning
Deck Final
9/4/11

CALN TOWNSHIP

DEPARTMENT OF CODE ENFORCEMENT

Andrew F. Reczek, Director of Code Enforcement
Stephen L. Miller, Code Official / Fire Marshal
Raymond Stackhouse, Code Official / Deputy Fire Marshal
Joseph Arvay, Property Maintenance / Housing Inspector

www.calntownship.org

Phone: 610-384-0600 Ext. 145 Fax: 610-384-0689
Email: smiller@calntownship.org
253 Municipal Drive, P.O. Box 72149 Thorndale, Pa. 19372-0149

MISCELLANEOUS INSPECTION REPORT

DATE: 8-1-11 SM

LOCATION: 3225 Tyning Lane OK

TYPE OF INSPECTION: Deck / Patio Final

- Deck less than 30" Above grade, Zoning only - No Rough inspection provided, Not Called For
  - Less than 4 Risers
  - Guard in place 36" + High, spindles ok
- Patio Complete per plot plan
- Complete, ok for U&O

SM

CALN TOWNSHIP

DEPARTMENT OF CODE ENFORCEMENT

Andrew F. Reczek, Director of Code Enforcement
Stephen L. Miller, Code Official / Fire Marshal
Raymond Stackhouse, Code Official / Deputy Fire Marshal
Joseph Arvay, Property Maintenance / Housing Inspector

www.calntownship.org

Phone: 610-384-0600 Ext. 145 Fax: 610-384-0689
Email: smiller@calntownship.org
253 Municipal Drive, P.O. Box 72149 Thorndale, Pa. 19372-0149

MISCELLANEOUS INSPECTION REPORT

DATE: 6/9/2011 OK

LOCATION: 3225 Tyning Ln.

TYPE OF INSPECTION: Site Inspection

Deck + Patio positioned using string lines @ 10' width in accordance with the permit requirements, allowing a 20' rear yard setbacks.

Deck Footing excavated @ 36" below grade.

Final inspection required + conveyed to the owner

CALN TOWNSHIP
DEPARTMENT OF CODE ENFORCEMENT
Andrew F. Reczek, Director of Code Enforcement
Stephen L. Miller, Code Official / Fire Marshal
Raymond Stackhouse, Code Official / Deputy Fire Marshal
Joseph Arvay, Code Official / Housing Inspector
610.384.0600 fax: 610.384.0689 Email: andyr@calntownship.org
253 Municipal Drive, P.O. Box 72149 Thorndale, Pa 19372-0149
www.calntownship.org

May 18, 2011

Alison Pierce
3225 Tyning Lane
Downingtown, PA 19335

PERMIT REVIEW: Approval Conditioned upon the following; 10' x 12'Patio and Deck < 30" above grade
Steep Slope Property limited to 32% overall Lot Coverage
31% approved with this application

1. **It is the property owner's responsibility to provide locations of the deeded property corners to assure all structures are installed completely within these property lines and to further verify all structures meet the setback dimensions of the zoning district. If these locations cannot be established, a property survey will be required prior to installation in accordance with Section 155-115 C of the Caln Township Zoning Code**

2. **Deck and Patio structures constructed within a Cluster Development must maintain a minimum twenty (20) foot rear yard setback measured from the property line in accordance with Sections 155-56 D (1) (e) and 155-116 A(5). Deck and Patio must be reduce to a ten (10) foot width rather than the requested twelve (12) foot width.**

3. **Deck height is measured at a point 36" horizontally from the structure in accordance with Section R312.2 of the 2009 International Residential Code. If greater than 30" above grade at that point a building permit as required by Uniform Construction Code, Act 45.**

4. **Any grading required for the newly proposed patio shall not redirect storm water onto adjacent properties.**

5. **Contractors shall be properly registered with the Commonwealth of Pennsylvania Attorney General's office.**

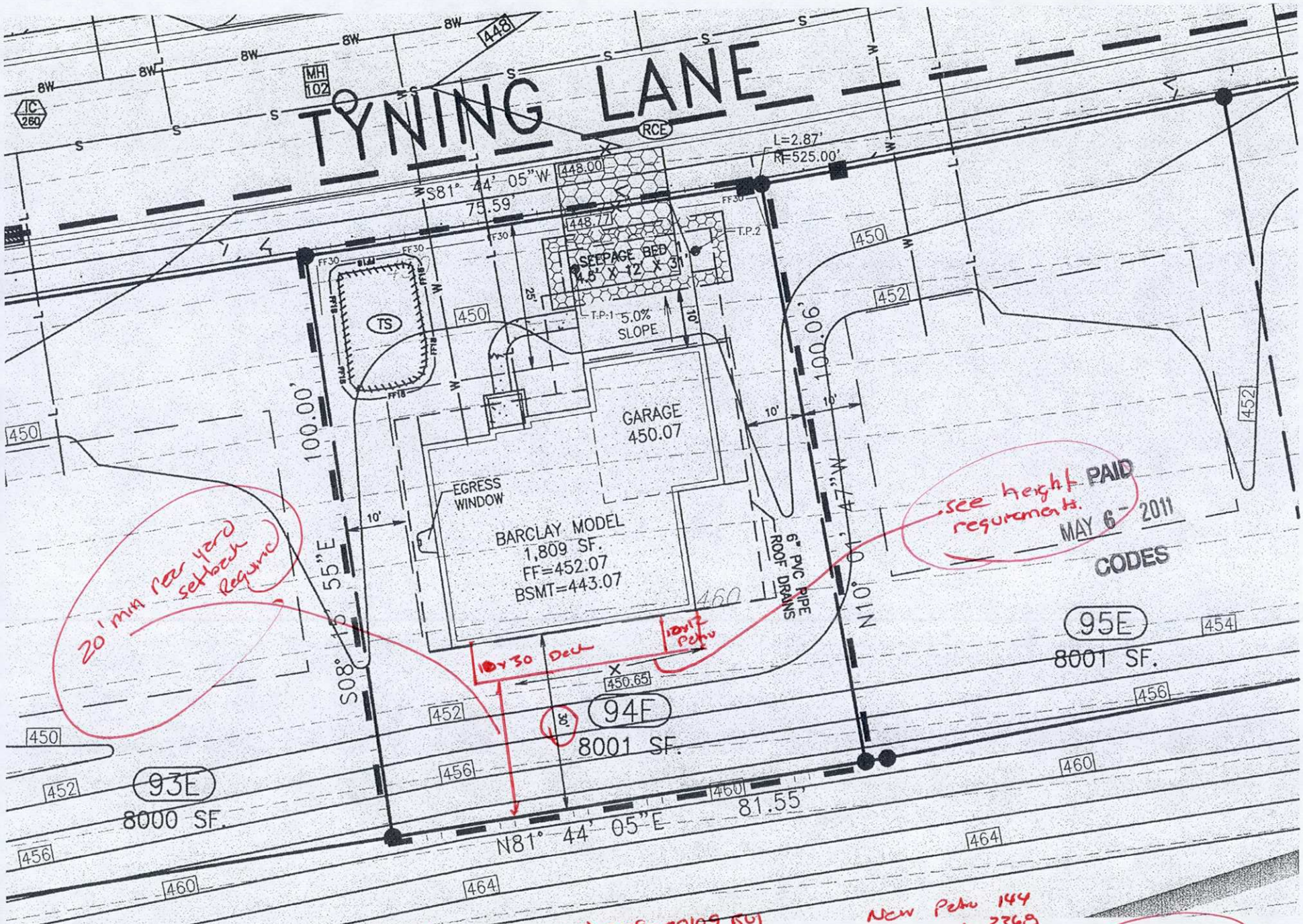

Steep Slope Property
Limited to 32% coverage } Permit # 2009-00109 BUI

Lot Area = 8,001

Previous Coverage = 2368

New Patio 144
+ 2368
2512
÷ 8,000 = 31.3% O/C Coverage

PAID
MAY 6 - 2011
CODES

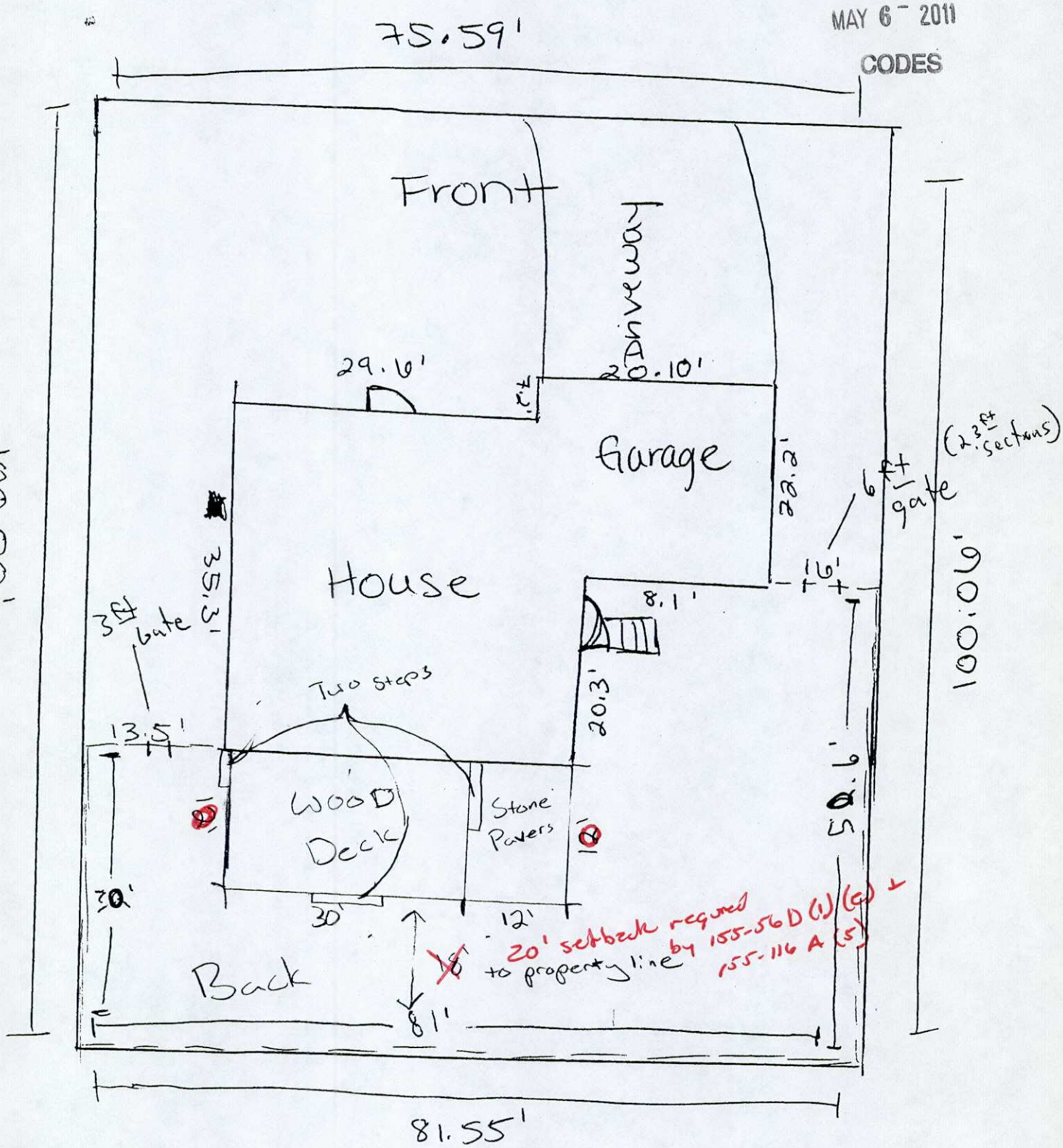

Deck finish height
will be 20 from grade
Deck framing will be P.T. wood - - - = Fence
Decking will be Timbertech composite
with concealed fastener system

TOWNSHIP OF CALN

PERMIT

Permit No: 2011-00045-ZONP

Date Issued: 5/20/2011

Location of Work: 3225 TYNING LA

Type of Work: PATIO - SEE COPY OF PERMIT REVIEW LETTER ATTACHED. A MIN. 20' REAR YARD SETBACK IS REQUIRED BY SECTINS 155-56D(1)© AND 155-116A(5). REDUCE DECK PATIO TO 10' IN WIDTH

Owner: BALESTRA, ALISON

Contractor: OWNER/APPLICANT

Parcel #:

ZONING OFFICER

THIS PLACARD MUST BE POSTED IN A CONSPICUOUS PLACE ON THE PREMISES, EASILY VISIBLE FROM THE PRINCIPAL STREET, WELL SECURED IF EXPOSED TO THE WEATHER, DURING THE ENTIRE CONSTRUCTION TIME.

WORK MUST BE STARTEDWITHIN 6 MONTHS FROM DATE OF ISSUE

Caln Township
253 Municipal Drive, Thorndale, PA 19372
610/384-0600, Fax 610/384-0689

ZONING PERMIT APPLICATION – PERMIT FEES ARE NON-REFUNDABLE.
Minimum fee due at time of permit application

Address 3225 Tyning Ln Downingtown, PA 19335 **Subdivision** _____ **Lot #** 94 **Zoning Dist.** R-3

IDENTIFICATION – To be completed by all applicants
OWNER and/or TENANT
Name: Alison Pierce
Address: 3225 Tyning Lane
Downingtown, PA 19335
Phone #: _____

Contractor Information: Effective 7/1/09 State Cert. # required: _____
Name: SELF
Address: _____
Phone #: _____

PAID
MAY 6 - 2011
CODES

DATE: _____
JOB COST: _____

ZONING PERMITS

Fence/Wall	☐	Patio	☑
Forestry Grading	☐	Shed	☐
Sign	☐		

WALL **Type:** _____ **Hgt.** _____
(less than 4' in height)

No wall shall be erected within a floodway, street right-of-way, utility easement, drainage or sewer easement. Please show all easements that exist on your property.

Show location of wall in relation to structures.
Walls erected within the require front yard shall not exceed three (3) feet in height

FENCE **Type:** _____
Height: _____

No fence shall be erected within a floodway, street right-of-way, utility easement, drainage or sewer easement. Please show all easements that exist on your property.

Show location of fence in relation to structures.

Fences erected within the required front yard shall not exceed five (5) feet.

SIGNS

Wall	☐	Special Event	☐
Freestanding	☐	(date of event)	_____
Banner	☐	Grand Opening	☐

Signs illuminated ☐ yes ☐ no
Existing Signs _____
Size of ea. Sign _____
Type of Signs _____
Bldg. Dimensions _____
Wall Frontage _____
Plot plan showing location of all signs(with dimensions) in relation to building and street right of way.

SHEDS (Less than 1000 Sq. Ft.) ☐

Size of Shed _____

Type of Shed		Type of foundation	
Wood	☐	Concrete Blocks	☐
Metal	☐	Gravel Bed	☐
		Concrete Slab	☐
		Other	☐

PATIO : Size 30'x12'/12'x12' Type Wood / Paver Show location and distances to property line on detailed plot plan. Plot plan must give dimensions of all structures (house, driveway, and other accessory structures)

SIGNATURE OF APPLICANT Alison Pierce Anthony Pierce DATE: 5/4/11

DO NOT WRITE IN THIS SPACE – FOR OFFICE USE ONLY

Permit # 45	Approved By: [signature]	Permit Fee: 55.00	Date Issued: 5/

REMARKS: A minimum 20' rear yard setback is required by Sections 155-56 D(1)(c) + 155-116 A(5)
Reduce Deck Patio to 10' in width / See attached Review Comments

CALN TOWNSHIP

Department of Code Enforcement

Andrew F. Reczek, Director of Code Enforcement
Stephen L.Miller, Code Official/Fire Marshal
Raymond Stackhouse, Code Official/Deputy Fire Marshal
Joseph Arvay, Property Maintenance/Housing Inspector
610-384-0600 fax: 610-384-0689 Email: andyr@calntownship.org
253 Municipal Drive, P.O. Box 72149 Thorndale, Pa. 19372-0149

www.calntownship.org

PROTOCOL FOR ZONING PERMIT SUBMITTAL

1. **The Zoning Officer has thirty (30) days to review applications.**
2. **Pennsylvania Home Improvement Contractor License number required.**
3. **Two set of plans must accompany submitted application with cross sections and details.**
4. **Provide plot plan showing all existing & proposed construction. No application will be accepted without the above information. Provide setback dimensions from any structure (new or existing) or paved surface to all property lines.**
5. **The minimum fee will be collected at time of application. Caln Township Code Official will calculate total fee. Any additional fees will be collected prior to issuance of Permit. Fee schedule is available on line @ www.calntownship.org.**
6. **Forestry applications – No permit required for up to four (4) trees per acre.**
7. **Forestry applications – Please provide two (2) detailed plot plans showing extent of forestry/grading. Plot plan must show property dimensions as well as all structures (if any) located on same with distances to property line. The applicant must also show limits of disturbances as it pertains to existing structures. Locate all easements, swales, berms, etc. that exist on the property and indicate location of erosion and sedimentation control measures to be used.**
8. **Walls (under 4' in height) only require a zoning permit.**
9. **Sign permit shall include plot plan. Building dimension with size & location of all new and existing signs. Freestanding signs – show height.**
10. **Caln Township reserves the right to reject any permit application that does not comply with above referenced requirements.**
11. **Patio permits- Show location and distances to property line on detailed plot plan. Plot plan must give dimensions of all structures (house, driveway, and other accessory structures)**

Signature of applicant_____

Date 5/4/11

TOTAL
55.00
CK # 149
MCCC

Date 5/6/11

Township of Caln
Receipt and Proof of Payment

GENERAL FUND

01-10-322-910 -- Police Services
01-10-322-900 -- Street Opening Fee
01-10-331-125 -- Vehicle/Speed Ctrl/Ordinance
01-10-361-305 -- Planning Fees
01-10-361-340 -- Zoning Hearing
01-10-362-410 -- Building Permit 55.00
01-10-362-415 -- Fire Inspection
01-10-362-452 -- U & O Res & Com
01-10-362-601 -- Housing Annual Rental Fee
01-10-362-602 -- Housing Tenant change Fee
01-10-362-610 -- Contractor License Fee
01-10-363-700 -- Bus Shelters
01-10-380-100 -- Miscellaneous
01-10-380-105 -- Tax Certification Fees
01-10-380-110 -- Cell Tower Fees
01-10-387-305 -- Parks/Pavilions
01-10-387-309 -- Recreation Programs
01-_____ --
01-_____ --
01-_____ --
01-_____ --

SEWER FUND

08-10-364-824 -- Inspection Fees
08- _____ --
08- _____ --

PAID
MAY 6 - 2011
CODES

OTHER FUNDS

3205 Tyning Pates

Department CMO

Finance

TOWNSHIP OF CALN
253 MUNICIPAL DR
THORNDALE, PA. 19372
610/384-0600

24 hrs. notice required for inspection scheduling

INSPECTION ASSIGNMENT SHEET

Building Permit No. 2011-00045-ZONP

Location 3225 TYNING LA, DOWNINGTOWN, PA 19335

Owner BALESTRA, ALISON

Contractor OWNER/APPLICANT

Description PATIO - SEE COPY OF PERMIT REVIEW LETTER ATTACHED. A MIN. 2

Comments SEE COPY OF PERMIT REVIEW LETTER ATTACHED. A MIN. 20' REAR YARD SETBACK IS REQUIRED BY SECTINS 155-56D(1)© AND 155-116A(5). REDUCE DECK PATIO TO 10' IN WIDTH

SITE INSPECTION PRIOR TO BEGINNING CONSTRUCTION

FINAL INSPECTION (performed after work is complete and PRIOR TO USING OR OCCUPYING CO

Friday, May 20, 2011

TOWNSHIP OF CALN
253 MUNICIPAL DR
THORNDALE, PA. 19372
610-384-0600

CERTIFICATE OF OCCUPANCY

Building Permit No.: 14-00308

Zoning District: R-3

Permission is hereby given:

BONAVENTURA, ANTHONY & GINA L
(owner of use)

3224 TYNING LANE, DOWNINGTOWN, PA
owner (new)

FENCE EXPERTS
contractor

Use Type: R RESIDENTIAL

(Lot & Development)

REMARKS

At: 3224 TYNING LA

Description: SPLIT RAIL SLIPBOARD 4' FENCE

7/1/14
Building Inspector DATE

Andrew F. Reczek
Zoning Officer/Building Code Official DATE
7/1/14

APPROVED AS TO COMPLIANCE WITH ZONING ORDINANCE.

IN ACCORDANCE WITH 2009 IRC

SCANNED
JUL 29 2014
ELECTRONICALLY FILED

CALN TOWNSHIP

DEPARTMENT OF CODE ENFORCEMENT

Andrew F. Reczek, Director of Code Enforcement
Stephen L. Miller, Code Official / Fire Marshal
Raymond Stackhouse, Code Official / Deputy Fire Marshal
Joseph Arvay, Property Maintenance / Housing Inspector

www.calntownship.org

Phone: 610-384-0600 Ext. 145 Fax: 610-384-0689
Email: smiller@calntownship.org
253 Municipal Drive, P.O. Box 72149 Thorndale, Pa. 19372-0149

MISCELLANEOUS INSPECTION REPORT

DATE: 6/30/14 SM

LOCATION: 3224 Tyning

TYPE OF INSPECTION: Fence Final

- Fence complete per plot plan
- 4' post & rail
- ok for U&O

SM

CALN TOWNSHIP

DEPARTMENT OF CODE ENFORCEMENT

Andrew F. Reczek, Director of Code Enforcement
Stephen L. Miller, Code Official / Fire Marshal
Raymond Stackhouse, Code Official / Deputy Fire Marshal
Joseph Arvay, Property Maintenance / Housing Inspector

www.calntownship.org

Phone: 610-384-0600 Ext. 145 Fax: 610-384-0689
Email: smiller@calntownship.org
253 Municipal Drive, P.O. Box 72149 Thorndale, Pa. 19372-0149

MISCELLANEOUS INSPECTION REPORT

DATE: 6/19/14 SM

LOCATION: 3224 Tynins

TYPE OF INSPECTION: Fence Site

- Fence Site ok per approved plot plan
- No Easements
- Property Corners marked w/ Monuments - Builder stakes
- 4' post & Rail, wire mesh
- ok to continue

SM

CALN TOWNSHIP
DEPARTMENT OF CODE ENFORCEMENT
Andrew F. Reczek, Director of Code Enforcement
Stephen L. Miller, Code Official / Fire Marshal
Raymond Stackhouse, Code Official / Deputy Fire Marshal
Joseph Arvay, Code Official / Housing Inspector
610.384.0600 fax: 610.384.0689 Email: areczek@calntownship.org
253 Municipal Drive, P.O. Box 72149 Thorndale, Pa 19372-0149
www.calntownship.org

June 6, 2014

Gina and Anthony Bonaventura
3224 Tyning Lane
Downingtown, PA 19320

PERMIT REVIEW: Fencing (4' Slip Board / Side & Rear Yard)

1. **It is the property owner's responsibility to provide locations of the deeded property corners to assure all structures are installed completely within the property lines. If these locations cannot be established, a property survey will be required prior to installation in accordance with Section 155-115 C of the Caln Township Zoning Code**

2. **Fencing shall be installed so as to place the structure members towards the property being enclosed; thereby presenting the best appears towards the adjacent properties.**

3. **Fencing shall not be installed within a utility or storm water easement.**

4. **Inspections shall be scheduled allowing a minimum 24-hr. notice by calling 610-384-0600. Required inspections; 1) Site prior to placing any fencing once property lines are established 2) Final**

RECEIVED
MAY 27 2014
CALN TWP.

$55

Caln Township
253 Municipal Drive, Thorndale, PA 19372
610/384-0600, Fax 610/384-0689
ZONING PERMIT APPLICATION – PERMIT FEES ARE NON-REFUNDABLE.
Minimum fee due at time of permit application

Address 3224 tyning lane **Subdivision** Northgate **Lot #**_____ **Zoning Dist.**_____

IDENTIFICATION – To be completed by all applicants
OWNER and/or TENANT
Name: Gina & Anthony Bonaventura
Address: 3224 tyning Lane
downingtown, PA 19335
Phone #

Contractor Information: Effective 7/1/09 State Cert. # required:
Name: Fence Experts
Address: 3312 Limestone Rd
Cochranville, PA 19330
Phone #: 610-430-0743

ZONING PERMITS

Fence/Wall	☒	Patio	☐
Forestry Grading	☐	Shed	☐
Sign	☐		

DATE:
JOB COST: $2700.00

WALL **Type:**_____ **Hgt.**_____
(less than 4' in height)

No wall shall be erected within a floodway, street right-of-way, utility easement, drainage or sewer easement. Please show all easements that exist on your property.

Show location of wall in relation to structures.
Walls erected within the require front yard shall not exceed three (3) feet in height

FENCE **Type:** Slip board
Height: 4 Feet

No fence shall be erected within a floodway, street right-of-way, utility easement, drainage or sewer easement. Please show all easements that exist on your property.

Show location of fence in relation to structures.

Fences erected within the required front yard shall not exceed five (5) feet.

SIGNS

Wall	☐	Special Event	☐
Freestanding	☐	(date of event)_____	
Banner	☐	Grand Opening	☐
Signs illuminated	☐ yes	☐ no	

Existing Signs _____
Size of ea. Sign _____
Type of Signs _____
Bldg. Dimensions _____
Wall Frontage _____
Plot plan showing location of all signs (with dimensions) in relation to building and street right of way.

SHEDS (Less than 1000 Sq. Ft.) ☐

Size of Shed _____

Type of Shed		Type of foundation	
Wood	☐	Concrete Blocks	☐
Metal	☐	Gravel Bed	☐
		Concrete Slab	☐
		Other	☐

PATIO : Size_____ Type_____ Show location and distances to property line on detailed plot plan.
Plot plan must give dimensions of all structures (house, driveway, and other accessory structures)

SIGNATURE OF APPLICANT_____ DATE:_____

DO NOT WRITE IN THIS SPACE – FOR OFFICE USE ONLY

Permit # 14-00308	Approved By:	Permit Fee: 55.00	Date Issued: 6/6/2014

REMARKS: See attached Review Comments

2206

Orange Area denotes the Location of the Split Rail Fence

LIMIT OF DISTURBANCE 8,016 SF.

N79°58'13"E 40.09'

N81°44'05"E 38.37'

83E

SEEPAGE BED 3'x6'x20'

PROPOSED ROOF DRAINS 6" PVC PIPE

N08°15'55"W 100.00'

S10°01'47"E 100.47'

12' x 14' DECK

W.O. 542.67 ALDEN 1,140 SF. FOOTPRINT

FF=452.00

BSMT=443.00

GARAGE 450.00

Gate

Double Gate

BIRMINGHAM 1,725 SF. FOOTPRINT

FF=450.77

BSMT=441.77

GARAGE 448.77

2.0% SLOPE

2.6% SLOPE

RCE

S72°58'13"W 19.10'

S81°44'05"W 47.81'

R=475.00' L=14.63'

FH

MH 102

5+00

TYNING ROAD

3224

DENSE VEGETATION

Township Copy

RECEIVED MAY 27 2014 CALN TWP.

RECEIVED
MAY 27 2014
CALN TWP

CALN TOWNSHIP

Department of Code Enforcement
Andrew F. Reczek, Director of Code Enforcement
Stephen L.Miller, Code Official/Fire Marshal
Raymond Stackhouse, Code Official/Deputy Fire Marshal
Joseph Arvay, Property Maintenance/Housing Inspector

www.calntownship.org

610-384-0600 fax: 610-384-0689 Email: andyr@calntownship.org
253 Municipal Drive, P.O. Box 72149 Thorndale, Pa. 19372-0149

PROTOCOL FOR ZONING PERMIT SUBMITTAL

1. **Provide plot plan showing all existing & proposed construction No application will be accepted without the above information. Provide setback dimensions from any structure (new or existing, ie – sheds, walls < 4 ft., deck < 30", fences, signs) or paved surface to all property lines.**
2. **Sign permit shall include plot plan. Building dimension with size & location of all new and existing signs. Freestanding signs – show height.**
3. **The minimum fee will be collected at time of application. Caln Township Code Official will calculate total fee. Any additional fees will be collected prior to issuance of Permit. Fee schedule is available on line @ www.calntownship.org**
4. **Caln Township reserves the right to reject any permit application that does not comply with above referenced requirements**
5. **The Zoning Officer has thirty (30) days to review applications.**
6. **Pennsylvania Home Improvement Contractor License number required.**
7. **Forestry Application - Please provide two (2) detailed plot plans showing extent of forestry/grading. Plot plan must show property dimensions as well as all structures (if any) located on same with distances to property line. The applicant must also show limits of disturbances as it pertains to existing structures. Locate all easements, swales, berms, etc. that exist on the property and indicate location of erosion and sedimentation control measures to be used.**

Signature of applicant _____

Date 5/27/14

FENCE-1 OP ID: CC

ACORD

CERTIFICATE OF LIABILITY INSURANCE

DATE (MM/DD/YYYY) 04/25/2014

THIS CERTIFICATE IS ISSUED AS A MATTER OF INFORMATION ONLY AND CONFERS NO RIGHTS UPON THE CERTIFICATE HOLDER. THIS CERTIFICATE DOES NOT AFFIRMATIVELY OR NEGATIVELY AMEND, EXTEND OR ALTER THE COVERAGE AFFORDED BY THE POLICIES BELOW. THIS CERTIFICATE OF INSURANCE DOES NOT CONSTITUTE A CONTRACT BETWEEN THE ISSUING INSURER(S), AUTHORIZED REPRESENTATIVE OR PRODUCER, AND THE CERTIFICATE HOLDER.

IMPORTANT: If the certificate holder is an ADDITIONAL INSURED, the policy(ies) must be endorsed. If SUBROGATION IS WAIVED, subject to the terms and conditions of the policy, certain policies may require an endorsement. A statement on this certificate does not confer rights to the certificate holder in lieu of such endorsement(s).

PRODUCER
W. T. Shevland & Assoc., Inc
Chester County Commons
13 Mystic Lane
Malvern, PA 19355
Joshua John Isler-New 2006

CONTACT NAME:
PHONE (A/C, No, Ext):
FAX (A/C, No):
E-MAIL ADDRESS:

INSURER(S) AFFORDING COVERAGE	NAIC #
INSURER A : Atlantic States	22586
INSURER B : Peninsula	
INSURER C : Donegal Mutual	13692
INSURER D :	
INSURER E :	
INSURER F :	

INSURED
The Fence Experts, LLC
3312 Limestone Rd
Cochoranville, PA 19330

COVERAGES CERTIFICATE NUMBER: REVISION NUMBER:

THIS IS TO CERTIFY THAT THE POLICIES OF INSURANCE LISTED BELOW HAVE BEEN ISSUED TO THE INSURED NAMED ABOVE FOR THE POLICY PERIOD INDICATED. NOTWITHSTANDING ANY REQUIREMENT, TERM OR CONDITION OF ANY CONTRACT OR OTHER DOCUMENT WITH RESPECT TO WHICH THIS CERTIFICATE MAY BE ISSUED OR MAY PERTAIN, THE INSURANCE AFFORDED BY THE POLICIES DESCRIBED HEREIN IS SUBJECT TO ALL THE TERMS, EXCLUSIONS AND CONDITIONS OF SUCH POLICIES. LIMITS SHOWN MAY HAVE BEEN REDUCED BY PAID CLAIMS.

INSR LTR	TYPE OF INSURANCE	ADDL INSR	SUBR WVD	POLICY NUMBER	POLICY EFF (MM/DD/YYYY)	POLICY EXP (MM/DD/YYYY)	LIMITS		
A	GENERAL LIABILITY X COMMERCIAL GENERAL LIABILITY CLAIMS-MADE X OCCUR GEN'L AGGREGATE LIMIT APPLIES PER: POLICY X PRO-JECT LOC			CPA8562302	01/09/2014	01/09/2015	EACH OCCURRENCE	$	1,000,000
							DAMAGE TO RENTED PREMISES (Ea occurrence)	$	100,000
							MED EXP (Any one person)	$	5,000
							PERSONAL & ADV INJURY	$	1,000,000
							GENERAL AGGREGATE	$	2,000,000
							PRODUCTS - COMP/OP AGG	$	2,000,000
								$	
C	AUTOMOBILE LIABILITY X ANY AUTO ALL OWNED AUTOS / SCHEDULED AUTOS X HIRED AUTOS / X NON-OWNED AUTOS X COMP $500 X COLL $500			CA8562302	01/29/2014	01/09/2015	COMBINED SINGLE LIMIT (Ea accident)	$	1,000,000
							BODILY INJURY (Per person)	$	
							BODILY INJURY (Per accident)	$	
							PROPERTY DAMAGE (PER ACCIDENT)	$	
								$	
C	X UMBRELLA LIAB X OCCUR EXCESS LIAB CLAIMS-MADE DED X RETENTION $ 0			CXL8562302	10/03/2013	10/03/2014	EACH OCCURRENCE	$	5,000,000
							AGGREGATE	$	5,000,000
								$	
B	WORKERS COMPENSATION AND EMPLOYERS' LIABILITY ANY PROPRIETOR/PARTNER/EXECUTIVE OFFICER/MEMBER EXCLUDED? (Mandatory in NH) Y/N N If yes, describe under DESCRIPTION OF OPERATIONS below	N/A		WCI8562302	01/09/2014	01/09/2015	X WC STATU-TORY LIMITS / OTH-ER		
							E.L. EACH ACCIDENT	$	1,000,000
							E.L. DISEASE - EA EMPLOYEE	$	1,000,000
							E.L. DISEASE - POLICY LIMIT	$	1,000,000
A	Equipment Section			CPA8562302	01/09/2014	01/09/2015	Contr. Eq		66,500

14

DESCRIPTION OF OPERATIONS / LOCATIONS / VEHICLES (Attach ACORD 101, Additional Remarks Schedule, if more space is required)

CERTIFICATE HOLDER

CALNT-1

Cain Township
253 Municipal Dr, PO Box 149
Thorndale, PA 19372-0149

CANCELLATION

SHOULD ANY OF THE ABOVE DESCRIBED POLICIES BE CANCELLED BEFORE THE EXPIRATION DATE THEREOF, NOTICE WILL BE DELIVERED IN ACCORDANCE WITH THE POLICY PROVISIONS.

AUTHORIZED REPRESENTATIVE

© 1988-2010 ACORD CORPORATION. All rights reserved.

The ACORD name and logo are registered marks of ACORD

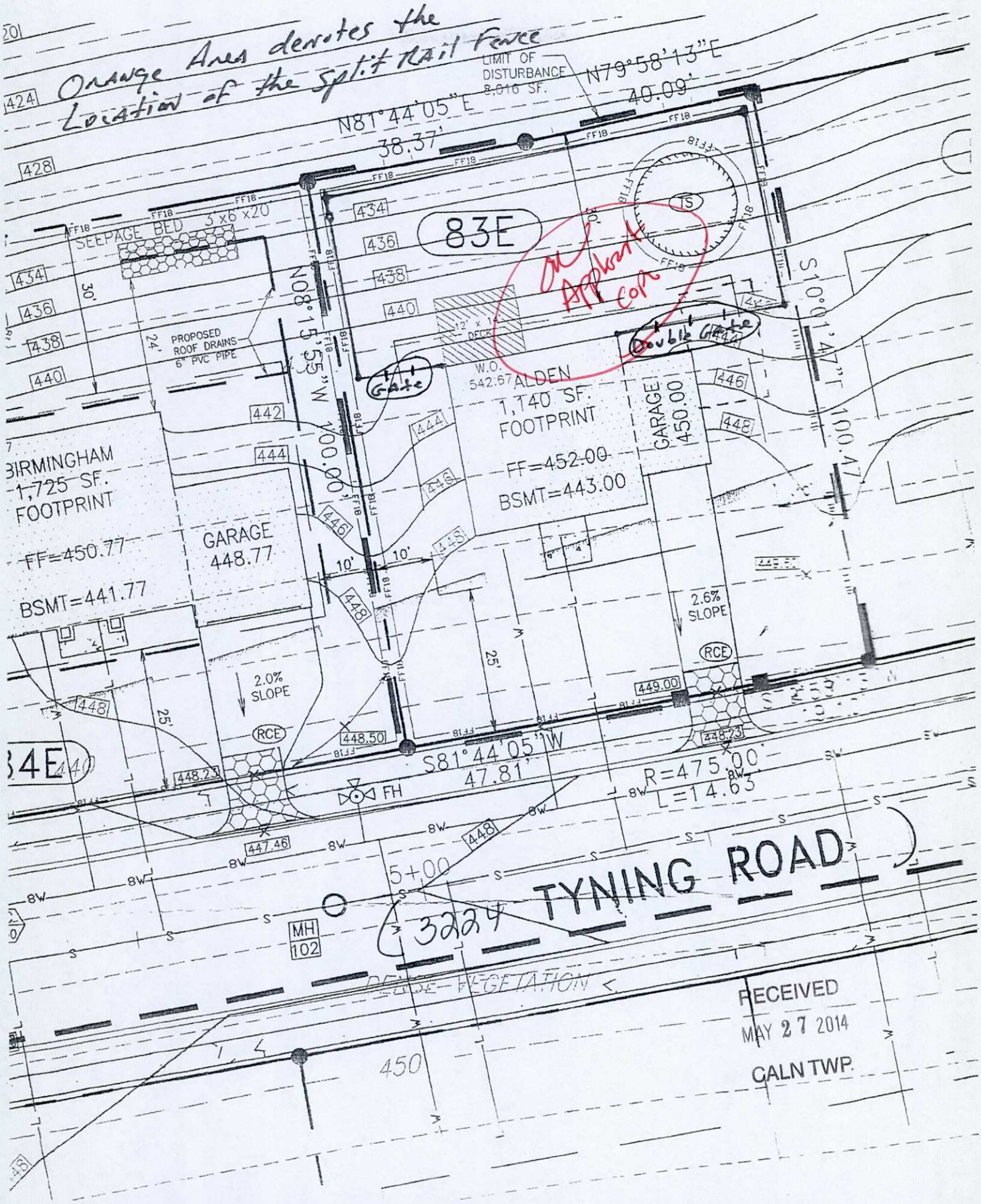
Orange Area denotes the Location of the Split Rail Fence
LIMIT OF DISTURBANCE 8,016 SF.
N79°58'13"E 40.09'
N81°44'05"E 38.37'
83E
SEEPAGE BED 3'x6'x20'
PROPOSED ROOF DRAINS 6" PVC PIPE
N08°15'55"W 100.00'
S10°01'47"E 100.47'
Gate
Double Gate
W.O. 542.67
ALDEN 1,140 SF. FOOTPRINT
FF=452.00
BSMT=443.00
GARAGE 450.00
BIRMINGHAM 1,725 SF. FOOTPRINT
FF=450.77
BSMT=441.77
GARAGE 448.77
2.0% SLOPE
2.6% SLOPE
RCE
S81°44'05"W 47.81'
R=475.00'
L=14.63'
FH
5+00
TYNING ROAD
3224
MH 102
DENSE VEGETATION
450
RECEIVED
MAY 27 2014
CALN TWP.

TOWNSHIP OF CALN
253 MUNICIPAL DR
THORNDALE, PA. 19372
610/384-0400

CERTIFICATE OF OCCUPANCY

Building Permit No. 2008-00082-BUI

UCC Certificate of Occupancy No. 8121

Zoning District R3

REMARKS

SCANNED
OCT 12 2009
ELECTRONICALLY FILED

Permission is hereby given:

MUNDY, JOSHUA
(owner of use)

JOSHUA MUNDY
owner (new)

EDWARDS BUILDERS, INC.
contractor

Use Type: DECK

LOT #58 BAILEY STATION
(Lot & Development)

At: 3372 ALYDAR RD, DOWNINGTOWN, PA 19335

For: RESIDENTIAL ACCESSORY STRUCTURE - DECK

10/7/09
Building Code Official DATE

10/7/2009
Zoning Officer DATE

IN COMPLIANCE WITH 2006 IBC CODES

APPROVED AS TO COMPLIANCE WITH ZONING ORDINANCE.

CALN TOWNSHIP

DEPARTMENT OF CODE ENFORCEMENT

Andrew F. Reczek, Director of Code Enforcement
Stephen L. Miller, Code Official / Fire Marshal
Raymond Stackhouse, Code Official / Deputy Fire Marshal
Joseph Arvay, Property Maintenance / Housing Inspector

www.calntownship.org

Phone: 610-384-0600 Ext. 145 Fax: 610-384-0689
Email: smiller@calntownship.org
253 Municipal Drive, P.O. Box 72149 Thorndale, Pa. 19372-0149

MISCELLANEOUS INSPECTION REPORT

DATE: 10/7/09

LOCATION: 3372 Alydar

TYPE OF INSPECTION: Deck Final / NOV Follow up.

- All Items Listed on 4/14/08 FCN complete
- Decking complete
- Guard system in place, Steps - Treads - Risers & graspable rail ok.

ok for U&O - close NOV

SO

ok

CALN TOWNSHIP

DEPARTMENT OF CODE ENFORCEMENT

Andrew F. Reczek, Director of Code Enforcement
Stephen L. Miller, Code Official / Fire Marshal
Raymond Stackhouse, Code Official / Deputy Fire Marshal
Joseph Arvay, Code Official / Housing Inspector

www.calntownship.org

610-384-0600 fax: 610-384-0689 Email: andyr@calntownship.org
253 Municipal Drive, P.O. Box 72149 Thorndale, Pa. 19372-0149

September 30, 2009

Mr. Joshua Mundy
3372 Alydar Road
Downingtown, PA 19335

Complete 10/7/09
All work finished
Proves FCN resolved
ok for U&O
SA

RE: Residential Code Violations
Building Permit #2008-82
Deck

NOTICE OF VIOLATION

Dear Mr. Mundy:

You are hereby notified that the property owned by you, located at 3372 Alydar Raod, Caln Township, Chester County, Pennsylvania (the Property) is in violation of the Caln Township Code, Chapters 122 and 120 for the reasons specified below.

Violations: Chapter 122, section 122-1 adopts the 2006 International Residential Code (IRC) as the residential code of Caln Township. It has recently come to our attention that the above referenced building permit has not been completed. As a result, the following violation is noted;

- **Chapter 122, Section 122-1, subsection R109.1.6. Inspections:** This section requires that a final inspection be made as required by the itemized list provided with the approved Building Permit.

Correction Order: The Township will grant you twenty (20) days from receipt of this Notice to call for the required inspection. Furthermore any use or occupancy of the areas affected by construction activities are strictly prohibited until all the required inspections have been made and approved by the Code Official and a proper Certificate of Occupancy is issued. This assigned timeframe will be demonstrated either by our receipt of a U.S. Mail Certified Receipt Card or the Posting of the Property by the Caln Township Code Enforcement Officer, whichever is sooner.

Township Action Upon Your Non-Compliance: If the violations mentioned above are not completed within the specified timeframe or this Notice of Violation is not appealed within the timeframes specified below, the Township will take the necessary steps to file non-traffic citations of not more than $100.00 and not more than $1,000.00 for each day the violation continues and shall include all reasonable attorney's fees.

Appeal Rights: You have the right to appeal all residential code violations as referenced in the sections above, to the Caln Township Building Appeals Board within twenty (20) days of your receipt or posting of this Notice. All appeals must be filed on the required application forms available at the Caln Township Municipal Building at the above address, Monday through Friday from 8:00 AM to 4:30 PM prevailing time.

I hope that these violations will be resolved and corrected by you within the allotted time. Please feel free to contact the Code Enforcement Department at the number above if you have any questions or need further assistance.

Sincerely,

Stephen L. Miller
Code Official / Fire Marshal

cc: File

CALN TOWNSHIP

DEPARTMENT OF CODE ENFORCEMENT

Andrew F. Reczek, Director of Code Enforcement
Stephen L. Miller, Code Official / Fire Marshal
Raymond Stackhouse, Code Official / Deputy Fire Marshal
Joseph Arvay, Property Maintenance / Housing Inspector

www.caintownship.org

Phone: 610-384-0600 Ext. 145 Fax: 610-384-0689
Email: smiller@caintownship.org
253 Municipal Drive, P.O. Box 72149 Thorndale, Pa. 19372-0149

MISCELLANEOUS INSPECTION REPORT

DATE: 4/7/08 OK

LOCATION: 3372 Alydar

TYPE OF INSPECTION: Deck Footer / Rough

* Due to contractor change, permit review items missed.

- (5) pier type Footers, Sonu Tube. 14" x 36" + - Firm / Dry / unyielding Soil

- Deck Rough prebuilt & Temporarily Supported until Footers Complete

* Double 2x8 Beam Inadequate. A 3-ply Beam will be needed to Achieve Proper Beam Spans

- 2x8 Joists, 16" oc, on Hangers @ Both Beam & Ledger

- 2x8 ledger Anchored properly to Foundation, Properly Flashed

* 6x6 posts to be Added, notched & Thru Bolted

* (3) Beams to be Thru Bolted Every 3' with (2) ½" Bolts

Jm

* Contractor to be registered.

APRIL 2, 2008

STEVE EDWARDS STOPPED INTO THE OFFICE TODAY. ATTACHED IS A CHANGE TO THE DECK PERMIT FOR MUNDY'S RESIDENCE AT 3372 ALYDAR.

THEY WILL BE ADDING THREE STEPS AND I HAVE ATTACHED THE DRAWINGS FOR REVIEW. HE ALSO HAD A QUESTION REGARDING THE FOOTERS.

PLEASE LET ME KNOW IF ANYTHING MORE IS NEEDED, OR ARE THESE ATTACHMENTS SUFFICIENT?

THANKS.

Mondy Residence

3372 ALYDAR ROAD Downingtown, PA 19355

RECEIVED

APR 02 2008

CODES

Moncly Residence
3372 ALYDAR ROAD
Downingtown PA, 19355

DO I NEED RAILING?
DO I NEED FOOTERS UNDER PLATFORM?

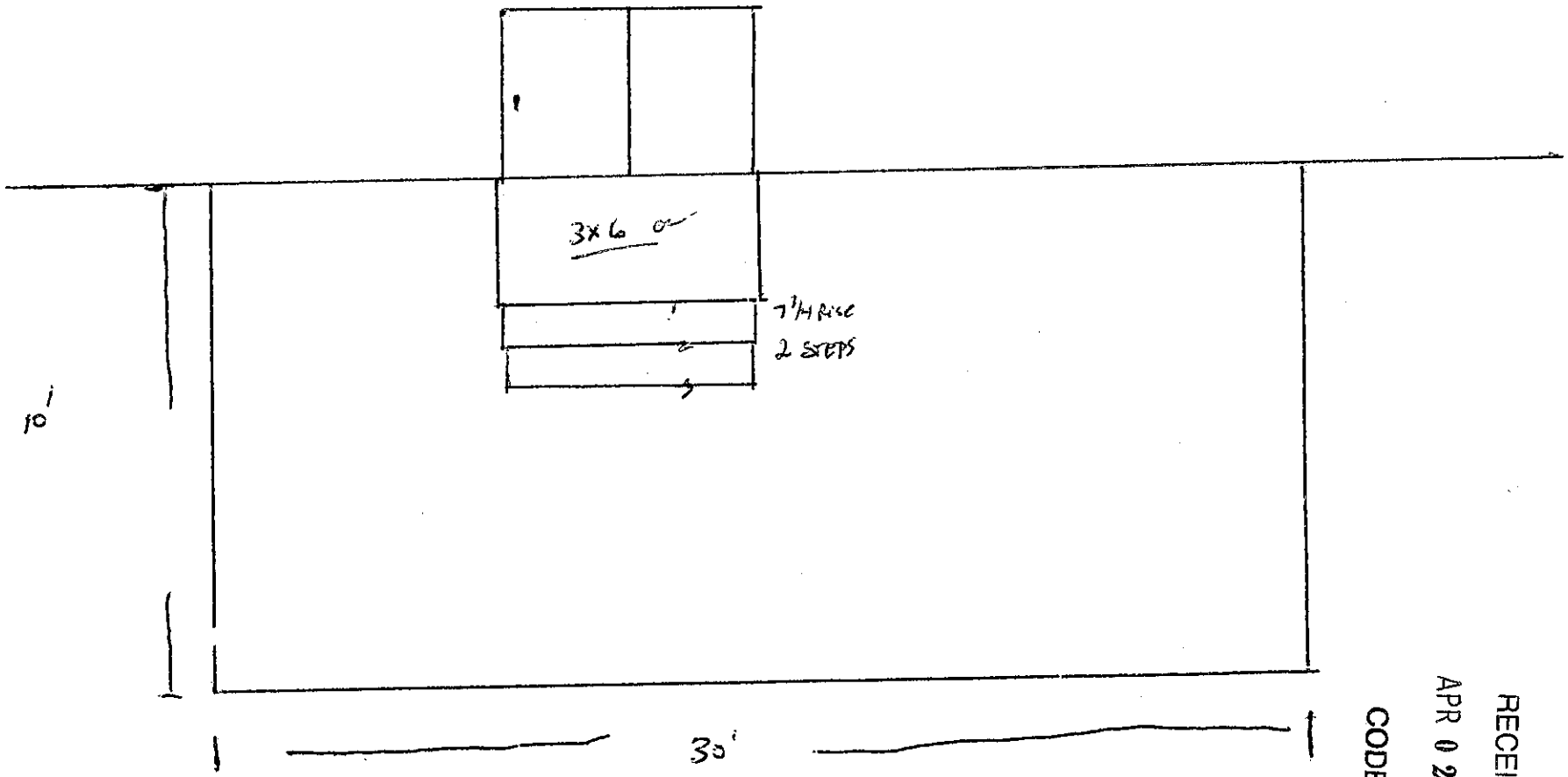

RECEIVED
APR 02 2008
CODES

Mundy Residence
3372 Alydar Road
Doylestown PA, 18353

House

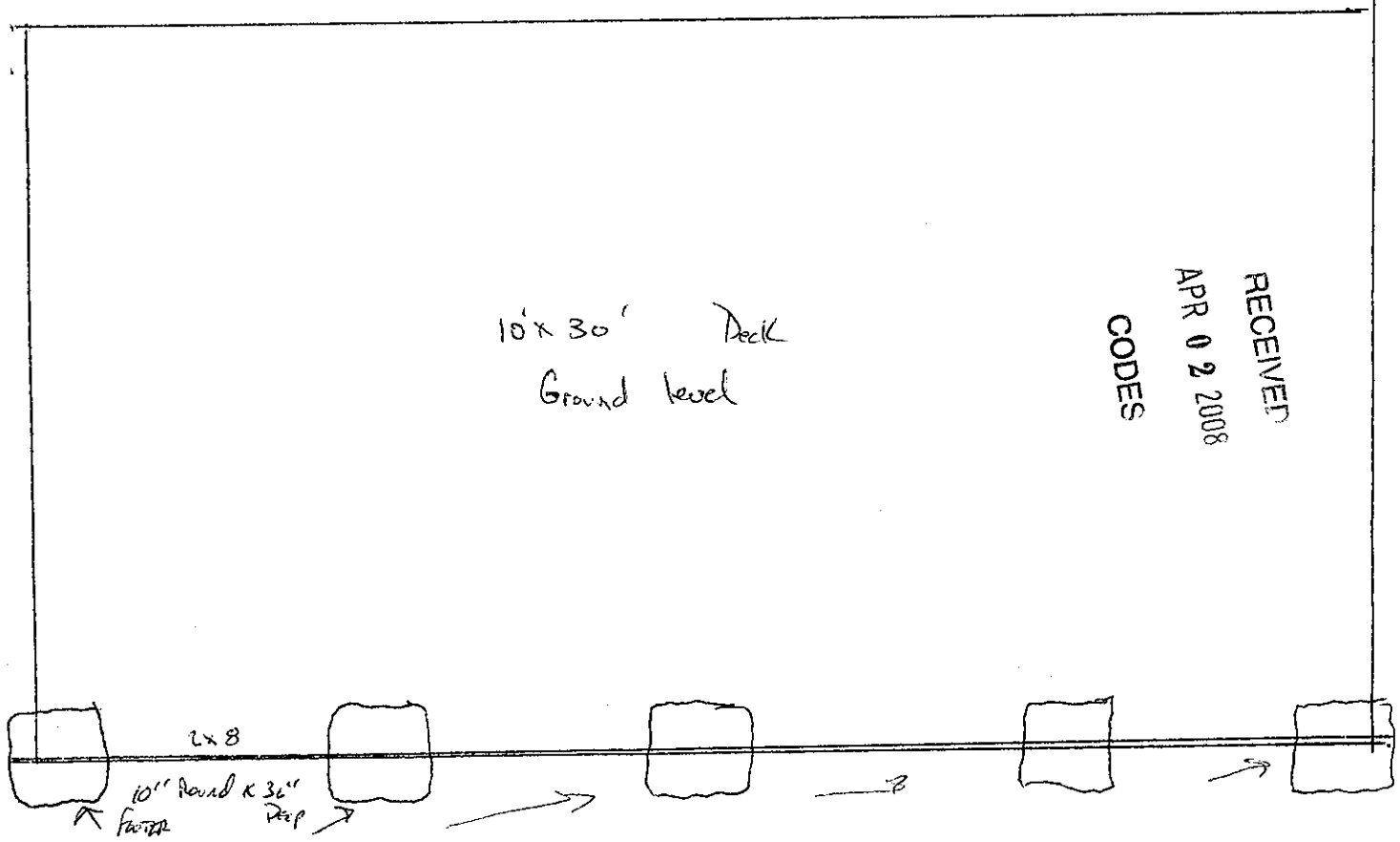

RECEIVED
APR 02 2008
CODES

10" Sonotube Footers 36" Deep
Attach Double 2x8 To Foot Hangers Directly into Footers

TOWNSHIP OF CALN
253 MUNICIPAL DR
THORNDALE, PA. 19372
610/384-0600 X 119

24 hrs. notice required for inspection scheduling

INSPECTION ASSIGNMENT SHEET

Building Permit No. 2008-00082-BUI

Location 3372 ALYDAR RD, DOWNINGTOWN, PA 19335

Owner MUNDY, JOSHUA

Contractor EDWARDS BUILDERS, INC.

Description DECK

Comments SEE COPY OF PERMIT REVIEW LETTER ATTACHED

SITE INSPECTION PRIOR TO BEGINNING CONSTRUCTION

FORM INSPECTION PRIOR TO POURING FOOTERS

ROUGH FRAMING INSPECTION PRIOR TO INSULATION OR INTERIOR COVERING (rough elec

FINAL INSPECTION (performed after work is complete and PRIOR TO USING OR OCCUPYING CO

CALN TOWNSHIP

DEPARTMENT OF CODE ENFORCEMENT

Andrew F. Reczek, Director of Code Enforcement
Stephen L. Miller, Code Official / Fire Marshal
Raymond Stackhouse, Code Official / Deputy Fire Marshal
Joseph Arvay, Code Official / Housing Inspector

www.calntownship.org

610-384-0400 fax: 610-384-0689 Email: andyr@calntownship.org
253 Municipal Drive, P.O. Box 72149 Thorndale, Pa. 19372-0149

March 27, 2008

Josh Mundy
3372 Alydar Road
Downingtown, PA 19335

PERMIT REVIEW: 10' x 30' Deck

1. All work must comply with the 2006 International Residential Code

2. Decks located in the R-3 Zoning District approved under the Cluster Development requirements must maintain a minimum 10' side yard and 20' rear yard setback from the surrounding property lines.

3. The proposed deck structure shall not be permitted to impact any slopes defined as Very Steep. Please see attached plot plan.

4. All new deck footings shall be a minimum **6" thick** and be placed on firm and stable soils at a minimum depth of 36". All posts shall be firmly supported by a solid footing. **Attachment shall be provided at the connection between post and footing when made at grade**

5. **(2) 2" x8" beam is permitted to span a maximum 5'9" in accordance with Table R502.5 (2). Add footings as necessary**

6. 2" x 8" floor joists, SPF #1, 16" on center shall be limited to 12'3" span in accordance with Table R502.3.1 (2). **Joist cantilevers shall not exceed 2'. Adequate bearing shall be provided for all joist members**

7. All framing connections must be made using nails and bolts as required for proper attachment. Anchoring shall be provided using a minimum **½ bolts** spaced no greater than 24" on center. Flashing shall be provided at connection between ledger board and the main structure.

8. Provide bracing to prevent lateral movement.

9. Stair risers shall not exceed 8 ¼" in height, Tread depths shall not be less than 9". All risers shall be enclosed and shall not differ in height more than 3/8"

10. Guard railings are required on all raised surfaces 30" or greater above grade and on all open sides of stairways with 4 or more risers. Guard Railings shall be a minimum 36" in height and be capable of preventing the passage of a 4" sphere.

11. A graspable hand railing is required on at least one side of stairs with 4 or more risers. Hand railings shall be 34" – 38" above the stair nosing.

12. **Stairway illumination shall be provided to all stair treads in accordance with Section R303.6**

13. Any Contractor performing work shall be registered in Caln Township

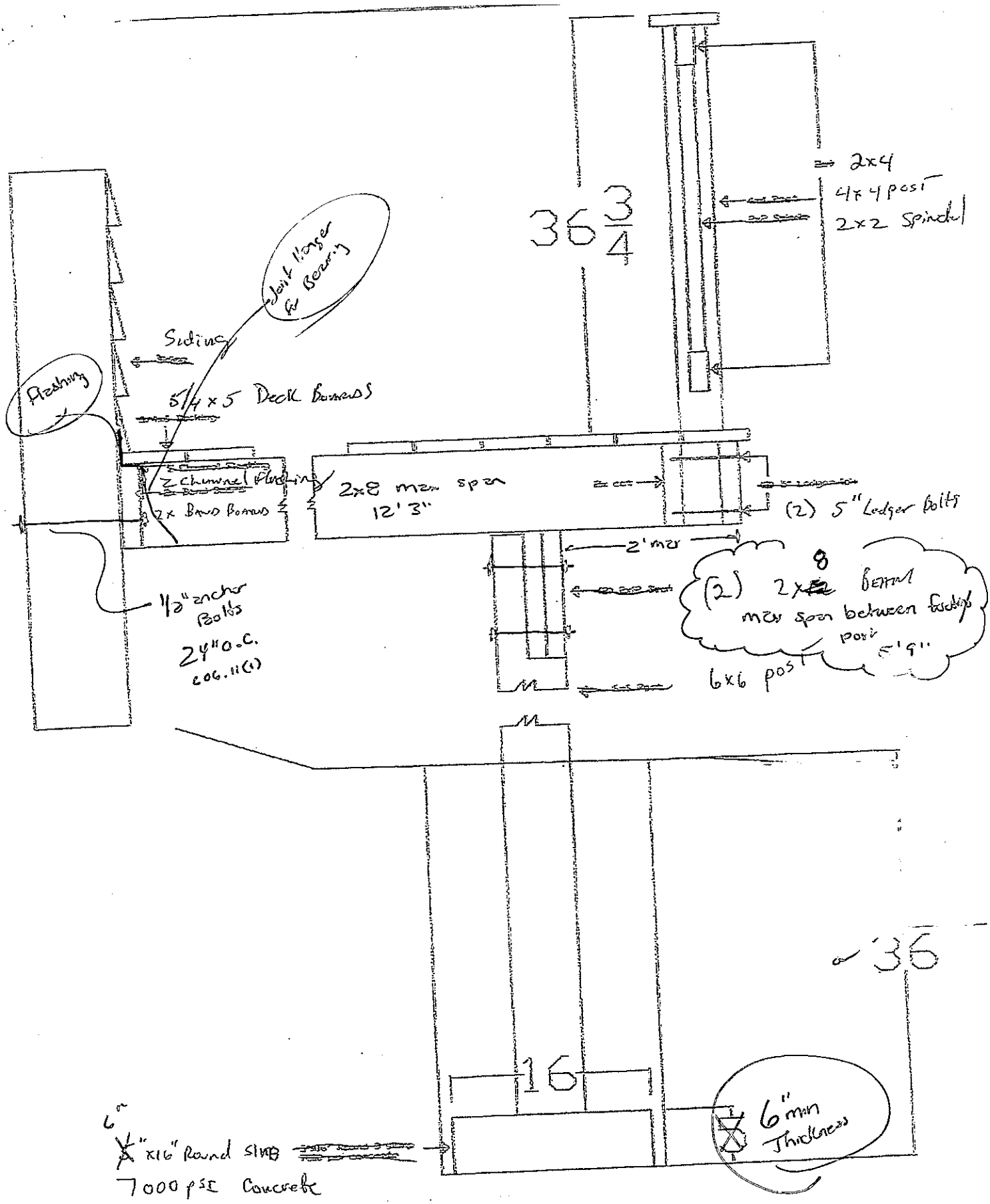

36 3/4
2x4
4x4 post
2x2 Spindel
Joist Hanger for Bearing
Siding
Flashing
5/4 x 5 Deck Boards
2 Channel Flashing
2x Band Boards
2x8 max span
12'3"
(2) 5" Ledger Bolts
2' max
(2) 2x8 Beam
max span between footings
post
5'9"
6x6 post
1/2" anchor Bolts
24" o.c.
606.11(1)
36
16
6" min Thickness
6"
x16" Round slab
7000 psi Concrete

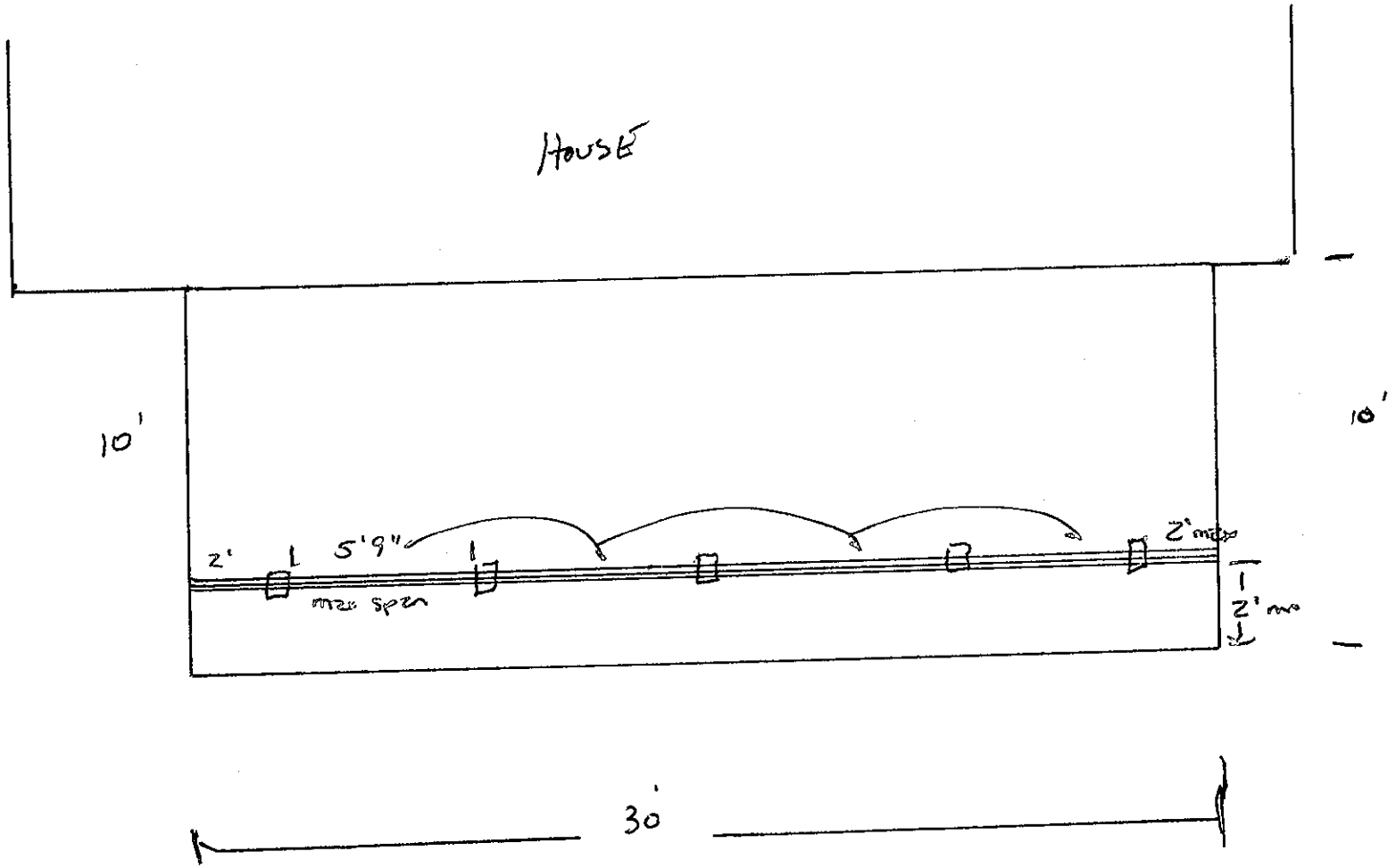

NO STEPS

SPEC SHEET FOR DECKS-R-US

FOOTING SIZE: 4 X 4 - 16" Round X ~~5"~~ 6" High
6 X 6 - 16" Round X ~~5"~~ 6" High
See Attached Drawing for locations

POST SIZE: 6 X 6 – Deck 4 X 4 Stairs
See Attached Drawing for locations

FLASHING is VINYL: Z Channel

FLASHING behind Bandboard is: VINYL

All JOIST Work is #1 Dried Natural Select Lumber

LAGS/BOLTS/NAILS are Hot Dipped Galv.

Screws are (Type 305) Stainless Steel

2"x8" – 2"x10" Joist Hangers are = USP #JUS28-TZ
18 ga. Galv. Steel – Triple Zinc Coated

2"x10" – 2"x12" Joist Hangers are = USP #JUS210-TZ
18 ga. Galv. Steel – Triple Zinc Coated

Double 2"x12" Joist Hangers are = LUS28-2Z
18 ga. Galv. Steel – Triple Zinc Coated

STAIR SPECS: See Attached Drawing

KEYSTONE CONCRETE PRODUCTS INC.

(717) 355-2361
FAX (717) 355-9548

477 E. Farmersville Road
NEW HOLLAND, PA 17557

All pills are 5" thick

Made with 7,000 P.S.I. dry cast concrete at a 28 day break.

Available in 12" and 16" diameter

Made with a 0% slump concrete

Machine made for quality control.

12" pills 72 pieces per pallet

16" pills 36 pieces per pallet

Mervin W Martin Jr

Secretary

Keystone Concrete Products Inc

Merv W Martin Jr

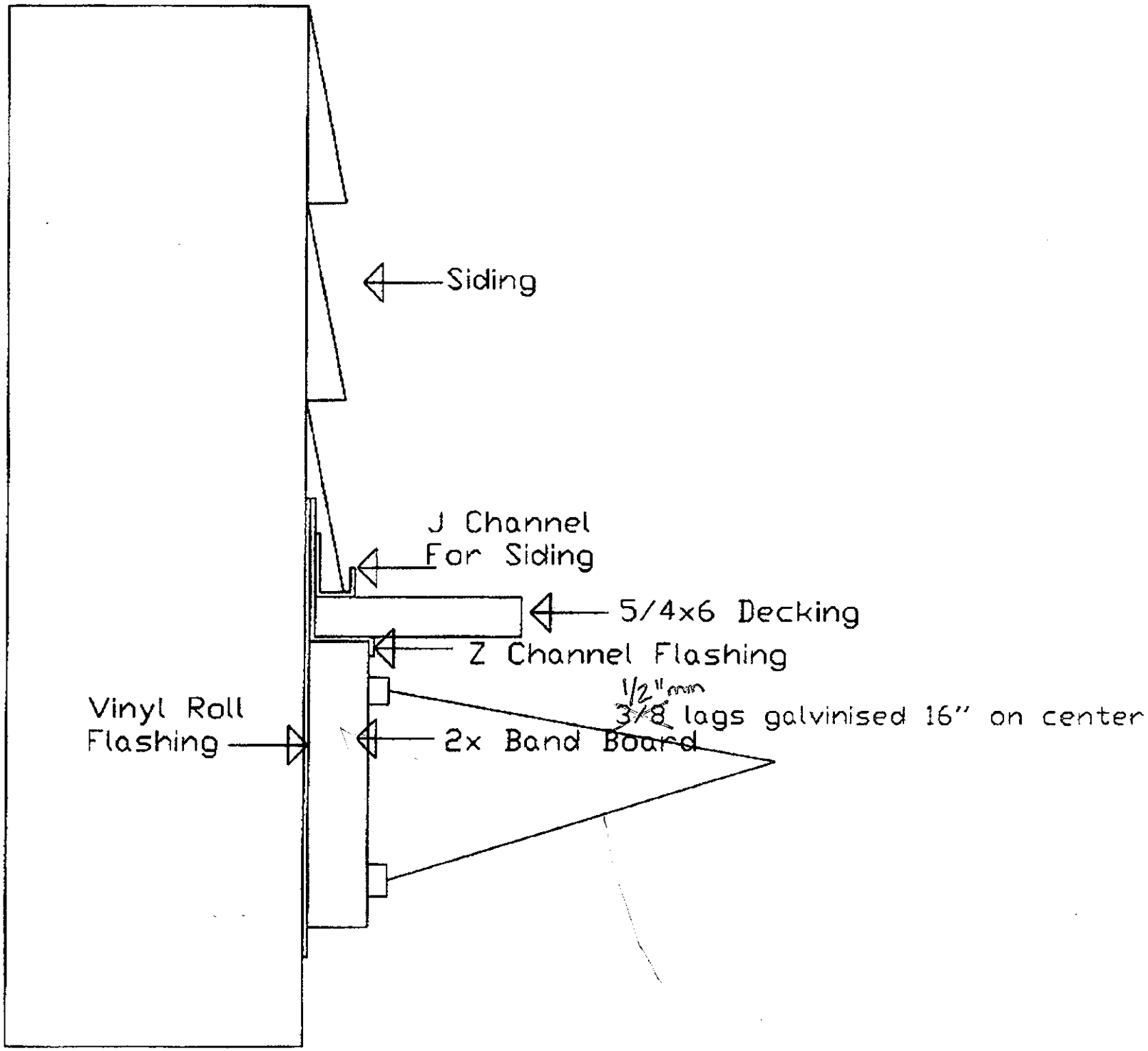
Siding
J Channel
For Siding
5/4x6 Decking
Z Channel Flashing
1/2"mm
3/8 lags galvinised 16" on center
Vinyl Roll
Flashing
2x Band Board

DECKS-R-US
2482-A Horseshoe Rd.
Lancaster, PA 17601
Phone 717-656-4843
Fax 717-656-7219

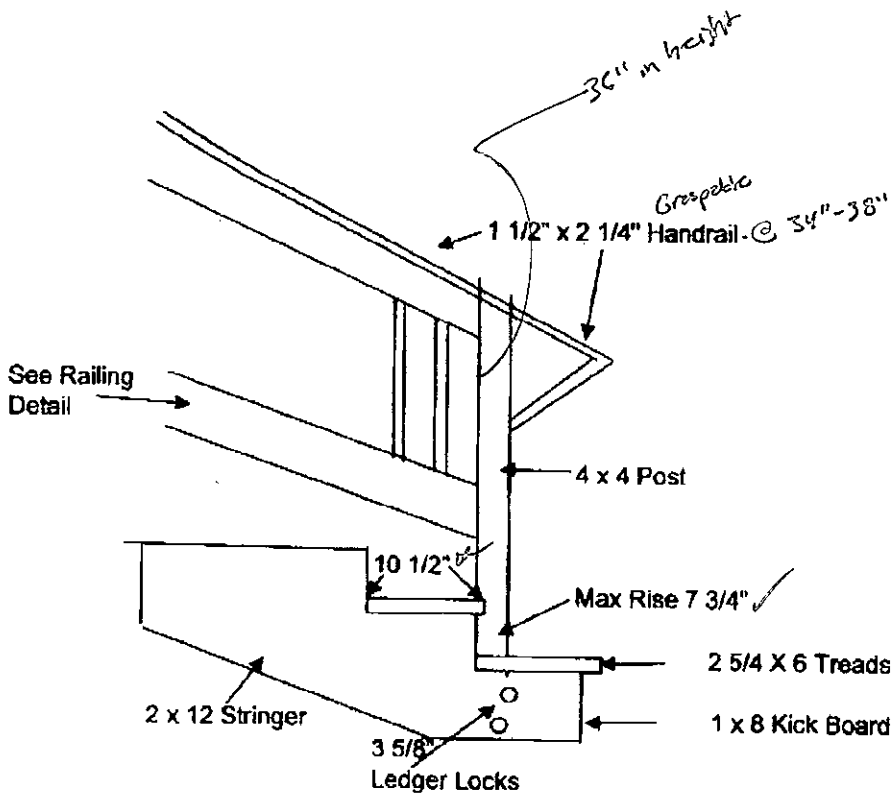

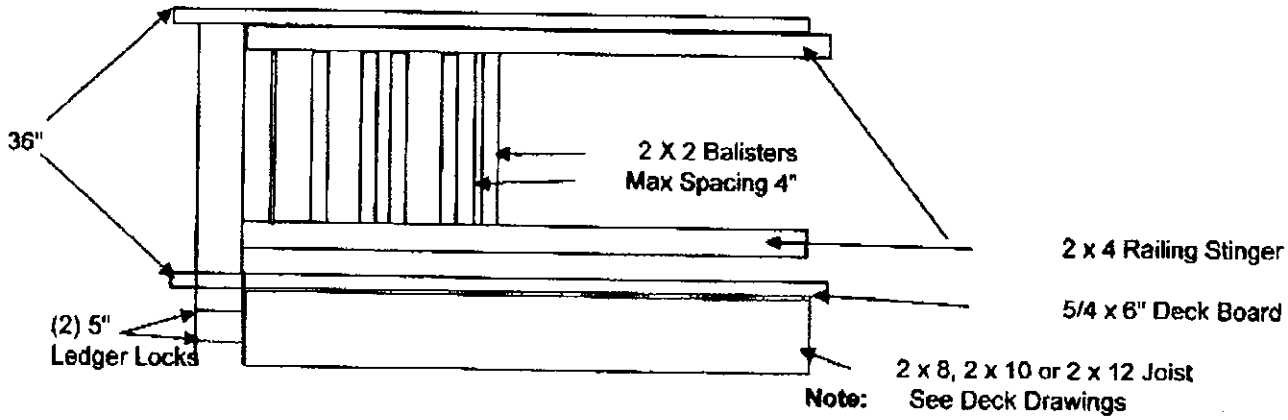

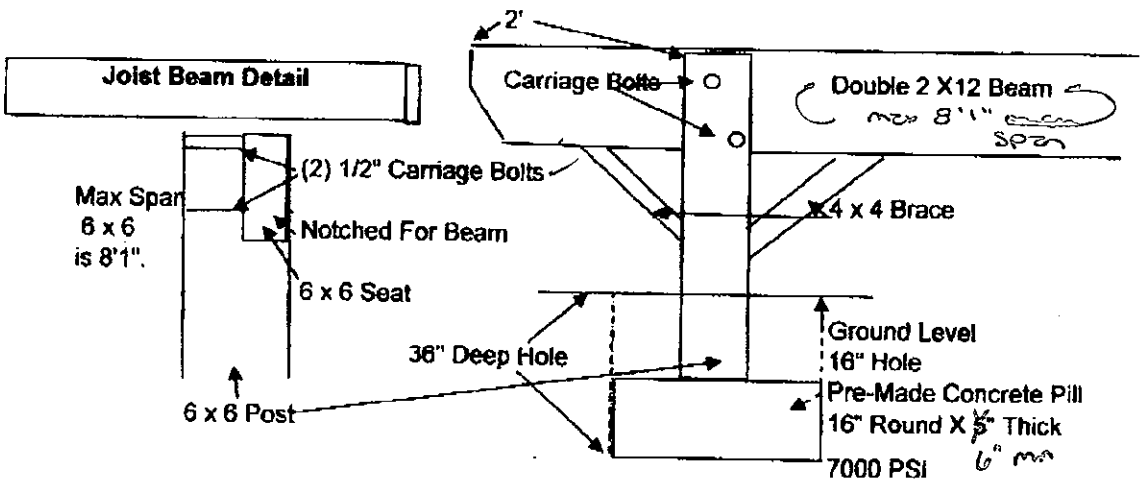

Sent By: Global Peace Initiative; 7176567219 ; May-30-07 1:21PM; Page 1/2

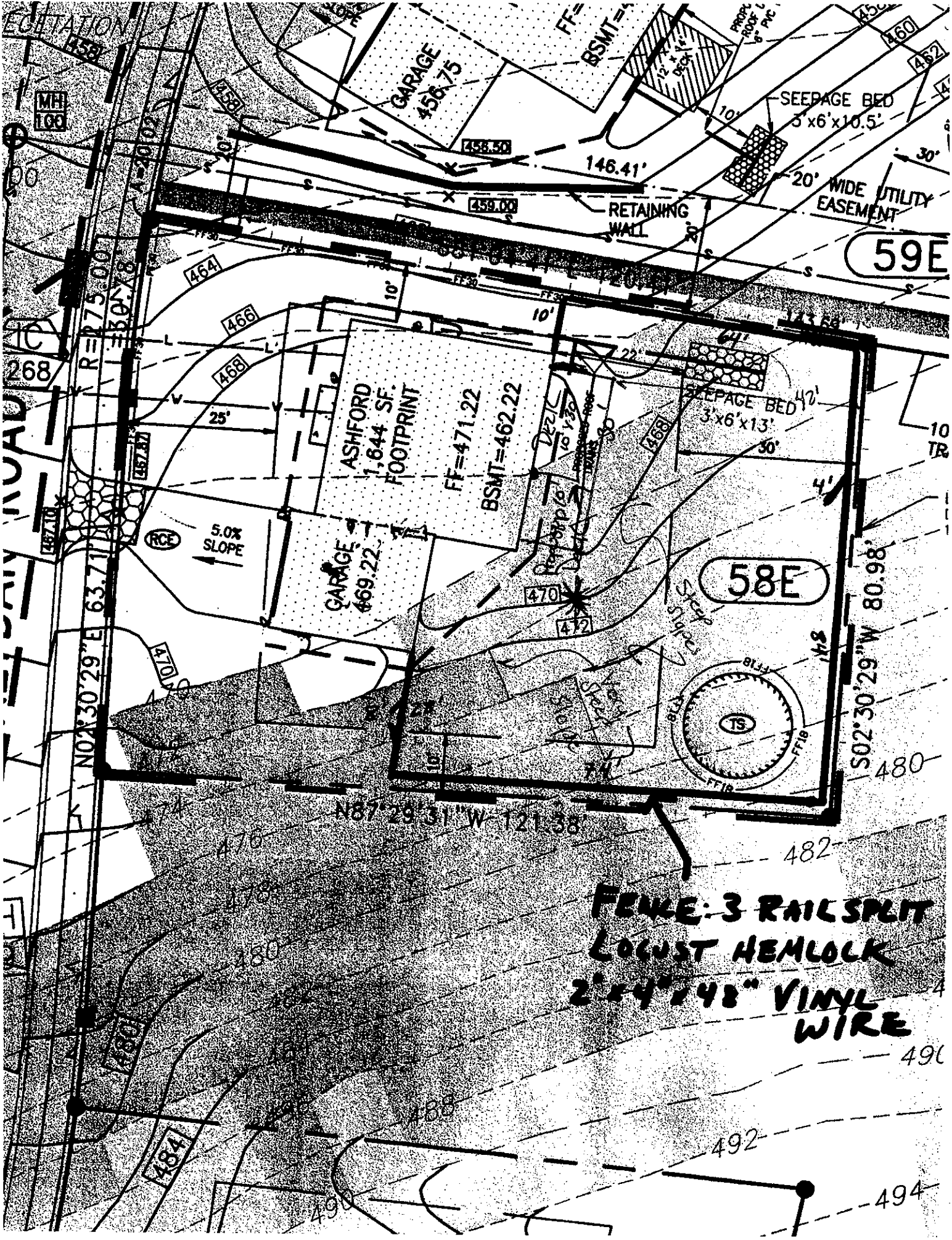
GARAGE 456.75
BSMT=
SEEPAGE BED 3'x6'x10.5'
146.41'
RETAINING WALL
WIDE UTILITY EASEMENT
59E
ASHFORD 1,644 SF. FOOTPRINT
FF=471.22
BSMT=462.22
SEEPAGE BED 3'x6'x13'
5.0% SLOPE
GARAGE 469.22
58E
N02°30'29"E 63.71'
S02°30'29"W 80.98'
N87°29'31"W 121.38'
FENCE: 3 RAIL SPLIT LOCUST HEMLOCK 2'x4'x48" VINYL WIRE

CALN TOWNSHIP
253 Municipal Drive, Thorndale, PA 19372
610/384-0600, Fax – 610/384-0689
BUILDING PERMIT APPLICATION – PERMIT FEES ARE NON-REFUNDABLE
Minimum fee due at time of permit application

Address 3372 Alydar Road **Subdivision** Northgate at Bailys **Lot #** 58E **Zoning Dist.** R-3

Building Improvement
- New Building ☐
- Addition ☐
- Alteration ☐
- Basement ☐
- Deck /Ramp 300 sq ft ☑
- Demolition ☐
- Driveway ☐
- Fire Protection ***
- Sprinkler/Alarm ☐
- Hot Tub **see directions ☐
- Tenant fit-out ☐
- Mechanical ** ☐
- Patio ☐
- Plumbing ☐
- Pool **see directions ☐
- Roof **see directions ☐
- Shed (>1000 sq.ft.) ☐
- Tank. ☐
- Other ☐

IDENTIFICATION – To be completed by all applicants

OWNER
Name: Josh Mundy
Address: 3372 Alydar Road
Downingtown, PA 19335
Phone #:

Contractor Information:
Name: EDWARDS Builders, Inc.
Address: P.O. Box 1128
Avondale PA, 19311
Phone #: 610-350-8666

Residential ☑ Location: Lot 58E Northgate
Commercial ☐ Location:

DATE: 2/20/08
Job Cost: $1,500.00

Sewage Disposal
- Public ☐
- Private ☐

Water Supply
- Public ☐
- Private ☐

Principal Type of Frame
- Frame ☑
- Masonry ☐
- Wood ☑
- Structural Steel ☐
- Reinforced Concrete ☐
- Other/specify ☐

Site located in Flood Area
Yes ☐ No ☑

Submit floor plan showing Location w/clearances & material types /Mechanical
Central AC? Yes ☐ No ☑
Will there be an Elevator? Yes ☐ No ☑

Residential Building Area:
# of Stories
Basement
Garage
1st. Floor
2nd. Floor
Total Habitable Space

Commercial Projects:
Use Group
Classification
Occupancy Load
Sprinklered ☐ Yes ☐ No

Residential Bldg. Only
Bedrooms NA
Bathrooms NA

Residential Bldg. Only
Bedrooms NA
Bathrooms

Type of Heating Fuel
- Gas ☐
- Oil ☐
- Electric ☐
- Coal ☐
- Other ☐

Lot Area NA sq.ft.
Building Coverage 164 sq.ft.
Total Impervious Coverage NA sq.ft.

 # Off Street Parking Spaces.

SIGNATURE OF APPLICANT: Stephen Edwards DATE: 2/20/08

DESCRIPTION /COMMERCIAL ACTIVITIES 300 sq. ft. accessory Deck / No additional impervious coverage

DO NOT WRITE IN THIS SPACE – FOR OFFICE USE ONLY

Permit # 00052	Approved By:	Permit Fee: 120.00	Date Issued: 3/27/08

REMARKS: See attached Review Comments

RECEIVED
MAR 06 2008
CODES

TOWNSHIP OF CALN

PERMIT

Permit No: 2008-00082-BUI

Date Issued: 3/28/2008

Location of Work: 3372 ALYDAR RD

Type of Work: DECK - SEE COPY OF PERMIT
REVIEW LETTER ATTACHED

Owner: MUNDY, JOSHUA

Contractor: EDWARDS BUILDERS, INC.

Parcel #:

ZONING OFFICER

THIS PLACARD MUST BE POSTED IN A CONSPICUOUS PLACE ON THE PREMISES, EASILY VISIBLE FROM THE PRINCIPAL STREET, WELL SECURED IF EXPOSED TO THE WEATHER, DURING THE ENTIRE CONSTRUCTION TIME.

WORK MUST BE STARTEDWITHIN 6 MONTHS FROM DATE OF ISSUE

Date 3-6-2008

Township of Caln
Receipt and Proof of Payment

19092

GENERAL FUND

01-10-322-910 --- Police Services Edwards 1614 - $80

01-10-322-900 --- Street Opening Fee 1613 - $75

01-10-331-125 --- Vehicle/Speed Ctrl/Ordinance

01-10-345-060 --- Act 205 - Pension

01-10-345-061 --- Fireman's Relief

01-10-345-080 --- Beverage License

01-10-361-305 --- Planning Fees

01-10-361-320 --- Act 247 Review/Inspection

01-10-361-340 --- Zoning Hearing

01-10-362-410 --- Building Permit $80

01-10-362-415 --- Fire Inspection

01-10-362-451 --- U & O New

01-10-362-452 --- U & O Res & Com

01-10-362-601 --- Housing Annual Rental Fee

01-10-362-602 --- Housing Tenant Change Fee

01-10-362-610 --- Contractor's License Fee $75

01-10-363-700 --- Bus Shelters

01-10-380-100 --- Miscellaneous

01-10-380-105 --- Tax Certification Fees

01-10-380-110 --- Cell Tower Fees

01-10-387-303 --- Lloyd Park Investment

01-10-387-305 --- Parks/Pavilions

01-10-387-307 --- Tennis Court Fee

01-10-387-309 ---Recreation Programs/Trips

01-_____ ---

01-_____ ---

01-_____ ---

01-_____ ---

PAID

MAR 06 2008

CODES

Department GB Treasurer

Date 3-6-2008

Township of Caln
Receipt and Proof of Payment

№ 19092

GENERAL FUND

01-10-322-910 --- Police Services Edwards 1614 - $80

01-10-322-900 --- Street Opening Fee 1613 - $75

01-10-331-125 --- Vehicle/Speed Ctrl/Ordinance

01-10-345-060 --- Act 205 - Pension

01-10-345-061 --- Fireman's Relief

01-10-345-080 --- Beverage License

01-10-361-305 --- Planning Fees

01-10-361-320 --- Act 247 Review/Inspection

01-10-361-340 --- Zoning Hearing

01-10-362-410 --- Building Permit $80

01-10-362-415 --- Fire Inspection

01-10-362-451 --- U & O New

01-10-362-452 --- U & O Res & Com

01-10-362-601 --- Housing Annual Rental Fee

01-10-362-602 --- Housing Tenant Change Fee

01-10-362-610 --- Contractor's License Fee $75

01-10-363-700 --- Bus Shelters

01-10-380-100 --- Miscellaneous

01-10-380-105 --- Tax Certification Fees

01-10-380-110 --- Cell Tower Fees

01-10-387-303 --- Lloyd Park Investment

01-10-387-305 --- Parks/Pavilions

01-10-387-307 --- Tennis Court Fee

01-10-387-309 ---Recreation Programs/Trips

01-_____ ---

01-_____ ---

01-_____ ---

01-_____ ---

PAID

MAR 06 2008

CODES

Department JB Treasurer

Date 4-2-08

Township of Caln
Receipt and Proof of Payment

GENERAL FUND

20154
TOTAL
$40.00
Ck # 1619
Edward

01-10-322-910 --- Police Services
01-10-322-900 --- Street Opening Fee
01-10-331-125 --- Vehicle/Speed Ctrl/Ordinance
01-10-345-060 --- Act 205 - Pension
01-10-345-061 --- Fireman's Relief
01-10-345-080 --- Beverage License
01-10-361-305 --- Planning Fees
01-10-361-320 --- Act 247 Review/Inspection
01-10-361-340 --- Zoning Hearing
01-10-362-410 --- Building Permit 40.00
01-10-362-415 --- Fire Inspection
01-10-362-451 --- U & O New
01-10-362-452 --- U & O Res & Com
01-10-362-601 --- Housing Annual Rental Fee
01-10-362-602 --- Housing Tenant Change Fee
01-10-362-610 --- Contractor's License Fee
01-10-363-700 --- Bus Shelters
01-10-380-100 --- Miscellaneous
01-10-380-105 --- Tax Certification Fees
01-10-380-110 --- Cell Tower Fees
01-10-387-303 --- Lloyd Park Investment
01-10-387-305 --- Parks/Pavilions
01-10-387-307 --- Tennis Court Fee
01-10-387-309 ---Recreation Programs/Trips
01-_____ ---
01-_____ ---
01-_____ ---
01-_____ ---

PAID
APR 0 2 2008
CODES

3372 Alg One - deck

Department Cmm Treasurer

Cathy Orth

From: paonecall [paonecall@calntownship.org]
Sent: Monday, February 25, 2008 5:02 PM
To: Cathy Orth
Subject: FW: FQ1 00013 POCS 02/25/08 17:01:57 0566831-000 NEW XCAV RTN

From: Delivery@pa1call.net[SMTP:DELIVERY@PA1CALL.NET]
Sent: Monday, February 25, 2008 5:01:57 PM
To: paonecall
Subject: FQ1 00013 POCS 02/25/08 17:01:57 0566831-000 NEW XCAV RTN
Auto forwarded by a Rule

FQ1 00013 POCS 02/25/08 17:01:57 0566831-000 NEW XCAV RTN

==========PENNSYLVANIA UNDERGROUND UTILITY LINE PROTECTION REQUEST==========

Serial Number--[0566831]-[000] Channel#--[1654032][0441]

Message Type--[NEW][EXCAVATION][ROUTINE]

County--[CHESTER] Municipality--[CALN TWP]
Work Site--[3372 ALYDAR RD]
Nearest Intersection--[BONDSVILLE RD]
Second Intersection--[W EMBREEVILLE RD]
Subdivision--[] Site Marked in White--[N]
Location Information--
[WORKING IN THE REAR OF THE PROPERTY. DEVELOPMENT IS ON THE W SIDE OF EMBREEVILLE RD AND S OS S SUMMIT AVE]
Caller Lat/Lon--[]
Mapped Type--[P] Mapped Lat/Lon--
[39.991734/-75.753957,39.990394/-75.766273,39.985632/-75.761494, 39.987239/-75.751781]

Type of Work--[INSTL A DECK] Depth--[36IN]
Extent of Excavation--[2FT DIA] Method of Excavation--[HAND, AUGER]
Street--[ ] Sidewalk--[ ] Pub Prop--[ ] Pvt Prop--[X] Other--[] Owner/Work Being Done for--
[JOSHUA MUNDY]

Lawful Start Dates--[28-Feb-08] Through [10-Mar-08]
Scheduled Excavation Date--[28-Feb-08] Dig Time--[0800] Duration--[]

Contractor--[JOSUHA MUNDY] Homeowner/Business--[H]
Address--[3372 ALYDAR RD]
City--[DOWNINGTOWN] State--[PA] Zip--[19335]

Caller--[JOSUHA MUNDY] Phone--[401-862-5998] Ext--[]
FAX--[] Email--[mundy.joshua@gmail.com]
Person to Contact--[JOSUHA MUNDY] Phone--[401-862-5998] Ext--[]
Best Time to Call--[ANY]

Prepared--[25-Feb-08] at [1701] by [DORIS SECKMAN]

Remarks--

TOWNSHIP OF CALN
253 MUNICIPAL DR
THORNDALE, PA. 19372
610-384-0600

CERTIFICATE OF OCCUPANCY

Building Permit No.: 14-00403

Zoning District: R-3

Permission is hereby given:

FLUCK KELLY E PIAZZA MATTHEW D
(owner of use)

3429 ALYDAR RD, DOWNINGTOWN, PA
owner (new)

SMUCKER BROTHERS CONSTRUCTION
contractor

Use Type: R RESIDENTIAL

(Lot & Development)

REMARKS

At: 3429 ALYDAR RD

Description: ACCESSORY DECK (384 SQ. FT.)

8/18/14
Building Inspector DATE

Andrew F. Reczek
Zoning Officer/Building Code Official DATE
8/15/14

IN ACCORDANCE WITH 2009 IRC

APPROVED AS TO COMPLIANCE WITH ZONING ORDINANCE.

SCANNED
SEP 23 2014
ELECTRONICALLY FILED

CALN TOWNSHIP

DEPARTMENT OF CODE ENFORCEMENT

Andrew F. Reczek, Director of Code Enforcement
Stephen L. Miller, Code Official / Fire Marshal
Raymond Stackhouse, Code Official / Deputy Fire Marshal
Joseph Arvay, Property Maintenance / Housing Inspector

www.calntownship.org

Phone: 610-384-0600 Ext. 145 Fax: 610-384-0689
Email: smiller@calntownship.org
253 Municipal Drive, P.O. Box 72149 Thorndale, Pa. 19372-0149

MISCELLANEOUS INSPECTION REPORT

DATE: 8/15/14

LOCATION: 3429 Alydar

TYPE OF INSPECTION: Deck Final

- (2) Hold downs / Tension ties visible
- Diagonal Bracing provided
- Steps ok / provided w/ graspable handrail
- Low voltage lighting provided
- 36" + guard system ok
- ok for U&O

OK

CALN TOWNSHIP

DEPARTMENT OF CODE ENFORCEMENT

Andrew F. Reczek, Director of Code Enforcement
Stephen L. Miller, Code Official / Fire Marshal
Raymond Stackhouse, Code Official / Deputy Fire Marshal
Joseph Arvay, Property Maintenance / Housing Inspector

www.calntownship.org

Phone: 610-384-0600 Ext. 145 Fax: 610-384-0689
Email: smiller@calntownship.org
253 Municipal Drive, P.O. Box 72149 Thorndale, Pa. 19372-0149

MISCELLANEOUS INSPECTION REPORT

DATE: 7/30/14

LOCATION: 3429 Alydar Road

TYPE OF INSPECTION: Deck Rough

- 6x6 posts, Set/mechanically Fastened to Footers, Notched For Beam
- Double 2x10 Beam, Set in post Notch & Thru Bolted w/ Fastermaster System
- 2x10 Joists, 16" o.c., Cantilever ok, Mid span Blocking, guard post Blocking, Hangers at [redacted] Ledger.
- 2x10 Ledger, 1/2" Lags 16" o.c. - Staggered ok Flashing ok
- 4x4 guard posts Blocked & Fastened w/Fastermaster System per mfg's Details

* (2) Hold controls to be visible At Final *

CALN TOWNSHIP

DEPARTMENT OF CODE ENFORCEMENT

Andrew F. Reczek, Director of Code Enforcement
Stephen L. Miller, Code Official / Fire Marshal
Raymond Stackhouse, Code Official / Deputy Fire Marshal
Joseph Arvay, Property Maintenance / Housing Inspector

www.calntownship.org

Phone: 610-384-0600 Ext. 145 Fax: 610-384-0689
Email: smiller@calntownship.org
253 Municipal Drive, P.O. Box 72149 Thorndale, Pa. 19372-0149

MISCELLANEOUS INSPECTION REPORT

DATE: 7/28/2014

LOCATION: 3429 Algeder Rd

TYPE OF INSPECTION: Deck Site

Rear property line established + deck outlined measured 20' minimum dimension. OK to install footing

Footing inspection 7/28/2014

(9) total Pier footing excavated using a 14" auger to a depth of 36" or more below grade. Soft soils removed + bottoms found firm + unyielding when probed (Soil consisted of silty sand + gravel)

Pier positioned to maintain a max beam span of 6'6"

OK to pour

TOWNSHIP OF CALN

PERMIT

Permit No: 14-00403

Date Issued: 06/26/14

Location of Work: 3429 ALYDAR RD

Type of Work: BUILDING/PERMIT ACCESSORY DECK

SEE ATTACHED REVIEW COMMENTS

Owner: FLUCK KELLY E PIAZZA MATTHEW D

Contractor: SMUCKER BROTHERS CONSTRUCTION

Parcel #: 39-4-739.0

Andrew F. Kaczeh

BUILDING CODE OFFICIAL

THIS PLACARD MUST BE POSTED IN A CONSPICUOUS PLACE ON THE PREMISES, EASILY VISIBLE FROM THE PRINCIPAL STREET, WELL SECURED IF EXPOSED TO THE WEATHER, DURING THE ENTIRE CONSTRUCTION TIME.

WORK MUST BE STARTEDWITHIN 6 MONTHS FROM DATE OF ISSUE

CALN TOWNSHIP
DEPARTMENT OF CODE ENFORCEMENT
Andrew F. Reczek, Director of Code Enforcement
Stephen L. Miller, Code Official / Fire Marshal
Raymond Stackhouse, Code Official / Deputy Fire Marshal
Joseph Arvay, Code Official / Housing Inspector
610.384.0600 fax: 610.384.0689 Email: areczek@calntownship.org
253 Municipal Drive, P.O. Box 72149 Thorndale, Pa 19372-0149
www.calntownship.org

June 25, 2014

Matt Piazza
3429 Alydar Rd.
Downingtown, PA 19335

PERMIT REVIEW: Building Permit / Accessory Deck (384 sq.ft)

1. All work shall comply with the 2009 International Residential Code and the Caln Township Zoning Code.
2. **Deck structure shall maintain the minimum 20' rear yard setback in accordance with the R-3 setback requirements and Sections 155-56 D & 155-116 A (5).**
3. All new deck footings shall be placed on firm and stable soils at a minimum depth of 36" below grade. Attachment shall be provided at the connection between post and footing to prevent uplift.
4. (2) 2" x10" beam is permitted to span a maximum 7'0" in accordance with Table R502.5 (2). Bearing and attachment shall be provided at each supporting post.
5. 2" x 10" floor joists, SPF #2, 16" on center shall be limited to 15'5" span; Joist cantilevers shall not exceed 2'. Adequate bearing shall be provided for all joist members. Joist hangers shall be provided as required for bearing
6. **Ledger shall be connected to the primary structure using a minimum ½" lag screw space not more than 13"o.c. The tip of the lag screw shall penetrate the interior of the band board.**
7. **Lateral bracing shall be provided at the POST / BEAM connections to prevent lateral movement.**
8. **Provide two 1,500 lb. Hold Down Tension Devices shall be provided in accordance with Section R502.2.2.3**
9. Composite decking shall be installed in accordance with the manufacture's specification.
10. Flashing shall be provided at the connection between ledger board and the main structure.
11. **Riser heights at exterior doors shall not exceed 7 ¾"**
12. **Stair risers shall not exceed 8 ¼ " in height, Tread depths shall not be less than 9". All risers shall be enclosed and shall not differ in height more than 3/8"**
13. **Guard railings are required on all raised surfaces (decks, ramps or patios) 30" or greater above grade and on all open sides of stairways with 4 or more risers. Guard Railings shall be a minimum 36" in height and be capable of preventing the passage of a 4" sphere. Guards shall support a 200 lb. lateral load at any point along the top rail in accordance with the American Wood Council detail attached**
14. Contractors shall be properly registered with the Commonwealth of Pennsylvania Attorney General's office
15. **Inspections shall be scheduled allowing a minimum of 24-hr notice by calling 610-384-0600. Required inspections include; 1) Site, 2) Footings prior to pour, 3) Rough Framing, 4) Final**

RECEIVED JUN 20 2014 CALN TWP.

RECEIVED JUN 19 2014 CALN TWP.

CALN TOWNSHIP
253 Municipal Drive, Thorndale, PA 19372
610/384-0600, Fax – 610/384-0689
BUILDING PERMIT APPLICATION – PERMIT FEES ARE NON-REFUNDABLE
Minimum fee due at time of permit application

Address 3429 Alydar RD **Subdivision** _____ **Lot #** 68E **Zoning Dist.** R3

Building Improvement
- New Building ☐
- Addition ☐
- Alteration ☐
- Basement ☐
- Deck /Ramp ☒
- Demolition ☐
- Driveway ☐
- Fire Protection
- Sprinkler/Alarm ☐
- Hot Tub ☐
- Tenant fit-out ☐
- Mechanical ☐
- Plumbing ☐
- Pool ☐
- Roof ☐
- Shed (>1000 sq. ft.) ☐
- Tank ☐
- Other ☐

IDENTIFICATION – To be completed by all applicants

OWNER
Name: Matt Piazza
Address: 3429 Alydar RD
Downingtown PA
Phone #: [redacted]

Home Improvement Contractor # PA083776
Expiration Date: 08/13/15
Name: Smucker Bros Construction
Address: 1330 Sheep Hill RD
East Earl PA 17519
Phone #: 717-587-8818

Residential ☒ Location: _____
Commercial ☐ Location: _____

DATE: 06/20/14
Job Cost: 13,800.00

Sewage Disposal
Public ☐ Private ☐

Water Supply
Public ☐ Private ☐

Type of Construction
IA ☐ IB ☐
IIA ☐ IIB ☐
IIIA ☐ IIIB ☐
IV ☐
VA ☐ VB ☐

Site located in Flood Area
Yes ☐ No ☐

Submit floor plan showing Location w/clearances & material types /Mechanical
Central AC?
Yes ☐ No ☐
Will there be an Elevator?
Yes ☐ No ☐

Residential Building Area:
# of Stories _____
Basement _____
Garage _____
1st. Floor _____
2nd.Floor _____
Total Habitable Space _____

Commercial Projects:
Use Group Classification _____
Occupancy Load _____
Sprinklered ☐ Yes ☐ No

Residential Bldg. Only
Bedrooms _____
Bathrooms _____

Residential Bldg. Only
Bedrooms _____
Bathrooms _____

Type of Heating Fuel
- Gas ☐
- Oil ☐
- Electric ☐
- Coal ☐
- Other ☐

Lot Area _____ sq.ft.
Building Coverage 400 sq.ft.
Total Impervious Coverage _____ sq.ft.

 # Off Street Parking Spaces _____

SIGNATURE OF APPLICANT: [signature] **DATE:** 06/20/14

DESCRIPTION /COMMERCIAL ACTIVITIES Build Deck

Under the provisions of Ordinance No. 2013-03, you may be entitled to a property tax exemption on your contemplated alteration or new construction. An application for exemption may be secured from the Code Enforcement office & must be filed with the Township at the time a building permit is secured.

DO NOT WRITE IN THIS SPACE – FOR OFFICE USE ONLY

Permit # 14-00403 | Approved By: [signature] | Permit Fee: 192.00 | Date Issued: 6/25/2014

REMARKS: See attached Review Comments

P:\Permit Applications\Permit Applications\Building Permit application .docx - Lerta.docx

ACORD®

CERTIFICATE OF LIABILITY INSURANCE

DATE (MM/DD/YYYY) 8/21/2013

THIS CERTIFICATE IS ISSUED AS A MATTER OF INFORMATION ONLY AND CONFERS NO RIGHTS UPON THE CERTIFICATE HOLDER. THIS CERTIFICATE DOES NOT AFFIRMATIVELY OR NEGATIVELY AMEND, EXTEND OR ALTER THE COVERAGE AFFORDED BY THE POLICIES BELOW. THIS CERTIFICATE OF INSURANCE DOES NOT CONSTITUTE A CONTRACT BETWEEN THE ISSUING INSURER(S), AUTHORIZED REPRESENTATIVE OR PRODUCER, AND THE CERTIFICATE HOLDER.

IMPORTANT: If the certificate holder is an ADDITIONAL INSURED, the policy(ies) must be endorsed. If SUBROGATION IS WAIVED, subject to the terms and conditions of the policy, certain policies may require an endorsement. A statement on this certificate does not confer rights to the certificate holder in lieu of such endorsement(s).

PRODUCER
Avis Insurance
3399 Jetstar Drive
Lititz PA 17543

CONTACT NAME: Madeleine Vedejs
PHONE (A/C, No, Ext): (717) 625-3770 FAX (A/C, No): (717) 625-3777
E-MAIL ADDRESS: mvedejs@avisinsurance.com

INSURER(S) AFFORDING COVERAGE	NAIC #
INSURER A: Mutual Benefit Insurance Co	14664
INSURER B: Select Risk Insurance Company	17752
INSURER C:	
INSURER D:	
INSURER E:	
INSURER F:	

INSURED
A C Masonry, LLC
253 Esbenshade Rd.
Ronks PA 17572

COVERAGES CERTIFICATE NUMBER: 2013-2014 REVISION NUMBER:

THIS IS TO CERTIFY THAT THE POLICIES OF INSURANCE LISTED BELOW HAVE BEEN ISSUED TO THE INSURED NAMED ABOVE FOR THE POLICY PERIOD INDICATED. NOTWITHSTANDING ANY REQUIREMENT, TERM OR CONDITION OF ANY CONTRACT OR OTHER DOCUMENT WITH RESPECT TO WHICH THIS CERTIFICATE MAY BE ISSUED OR MAY PERTAIN, THE INSURANCE AFFORDED BY THE POLICIES DESCRIBED HEREIN IS SUBJECT TO ALL THE TERMS, EXCLUSIONS AND CONDITIONS OF SUCH POLICIES. LIMITS SHOWN MAY HAVE BEEN REDUCED BY PAID CLAIMS.

INSR LTR	TYPE OF INSURANCE	ADDL INSR	SUBR WVD	POLICY NUMBER	POLICY EFF (MM/DD/YYYY)	POLICY EXP (MM/DD/YYYY)	LIMITS	
A	GENERAL LIABILITY X COMMERCIAL GENERAL LIABILITY CLAIMS-MADE X OCCUR GEN'L AGGREGATE LIMIT APPLIES PER: POLICY X PRO-JECT LOC			AC921505	8/29/2013	8/29/2014	EACH OCCURRENCE	$ 1,000,000
							DAMAGE TO RENTED PREMISES (Ea occurrence)	$ 100,000
							MED EXP (Any one person)	$ 5,000
							PERSONAL & ADV INJURY	$ 1,000,000
							GENERAL AGGREGATE	$ 2,000,000
							PRODUCTS - COMP/OP AGG	$ 2,000,000
								$
A	AUTOMOBILE LIABILITY X ANY AUTO ALL OWNED AUTOS SCHEDULED AUTOS HIRED AUTOS NON-OWNED AUTOS			BA921505	8/29/2013	8/29/2014	COMBINED SINGLE LIMIT (Ea accident)	$ 1,000,000
							BODILY INJURY (Per person)	$
							BODILY INJURY (Per accident)	$
							PROPERTY DAMAGE (Per accident)	$
							Medical Expense	$ 25,000
	UMBRELLA LIAB OCCUR EXCESS LIAB CLAIMS-MADE DED RETENTION $						EACH OCCURRENCE	$
							AGGREGATE	$
								$
B	WORKERS COMPENSATION AND EMPLOYERS' LIABILITY ANY PROPRIETOR/PARTNER/EXECUTIVE OFFICER/MEMBER EXCLUDED? Y/N (Mandatory in NH) If yes, describe under DESCRIPTION OF OPERATIONS below	N/A		WS921505	8/29/2013	8/29/2014	X WC STATU-TORY LIMITS OTH-ER	
							E.L. EACH ACCIDENT	$ 100,000
							E.L. DISEASE - EA EMPLOYEE	$ 100,000
							E.L. DISEASE - POLICY LIMIT	$ 500,000

RECEIVED
JUN 20 2014
CALN TWP.

DESCRIPTION OF OPERATIONS / LOCATIONS / VEHICLES (Attach ACORD 101, Additional Remarks Schedule, if more space is required)

CERTIFICATE HOLDER

Smucker Bros. Consruction
1330 Sheephill Rd
East Earl, PA 17519

CANCELLATION

SHOULD ANY OF THE ABOVE DESCRIBED POLICIES BE CANCELLED BEFORE THE EXPIRATION DATE THEREOF, NOTICE WILL BE DELIVERED IN ACCORDANCE WITH THE POLICY PROVISIONS.

AUTHORIZED REPRESENTATIVE

Dennis Moran/MADELI

© 1988-2010 ACORD CORPORATION. All rights reserved.
The ACORD name and logo are registered marks of ACORD

1 and 2 or
2 and 3
(notarization required when claiming exemption)

For Completion by Municipal Officer
Municipality – CALN TOWNSHIP
PERMIT NO. 14-00403
DATE Issued 6/26/14

1. The applicant for the building permit, in compliance with Act 44 of 1993, hereby submits (check one):
   ✓ Certificate of Insurance (please attach)
   _____ Certificate of Self-Insurance (please attach)
   _____ Affidavit of Exemption

2. If a Certificate of Insurance or Self-Insurance has been submitted, please complete the following:

   Name of Insurer
   Or Self-Insurer _____
   Address _____
   City _____ State _____ Zip _____
   Policy No. _____ Coverage Period Ends _____

   Name of Contractor/Policyholder Smucker Bros Construction
   Address 1330 Sheep Hill Rd
   City East Earl State PA Zip 17519
   Contractor/Policyholder's federal or state employer identification number (EIN) _____

1. This policy provides coverage for the requirements of the Workers' Compensation Act, the Occupational Disease Act, and, where applicable, the federal Longshore and Harbor Workers' Compensation Act.
2. The insurer has been notified that the municipality issuing the buildin permit is to be named a policy certificate holder.
3. Any subcontractors used on this project will be required to carry their own workers' compensation coverage.
4. The contractor/policy holder will notify the municipality of any change in status, cancellation or expiration of workers' compensation coverage.
5. Violation of the Workers' Compensation Act or the terms of this permit will subject the contractor/policy holder to a stop-work order and other fines and penalties as provided by law.

3. If an exemption is being claimed, please complete the following and sign in the presence of a notary public: Basis for exemption (check one)

   _____ Applicant is an individual who owns the property.

   _____ Contractor/Applicant is a sole proprietorship without employees.

   _____ Contractor/Applicant is a corporation and the only employees working on the project have and are qualified as "Executive Employee" under Section 104 of the Worker's Compensation Act. Please explain.

   _____

   _____

   _____ All of the contractor/applicant's employees on the project are exempt on religious grounds under Section 304.2 of the Workers' Compensation Act. Please explain.

   _____

   _____

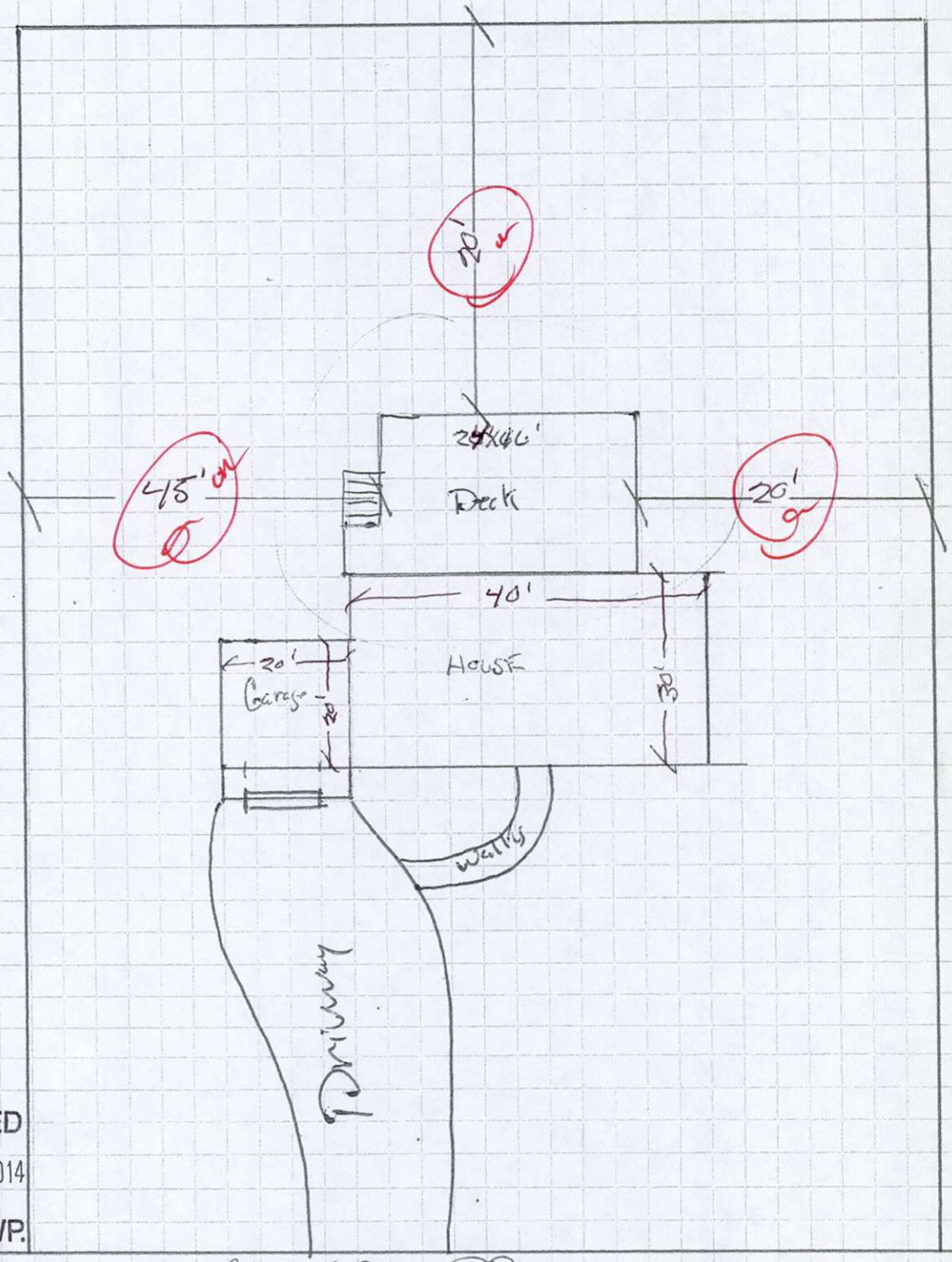

RECEIVED
JUN 20 2014
CALN TWP.

ALYDAR RD

Matt & Kelly
3429 Alyder RD
Downingtown PA

Decking = Timbertech (Silver Maple)
Railing's = Vinyl Railing (w/ Alum. Spindles)

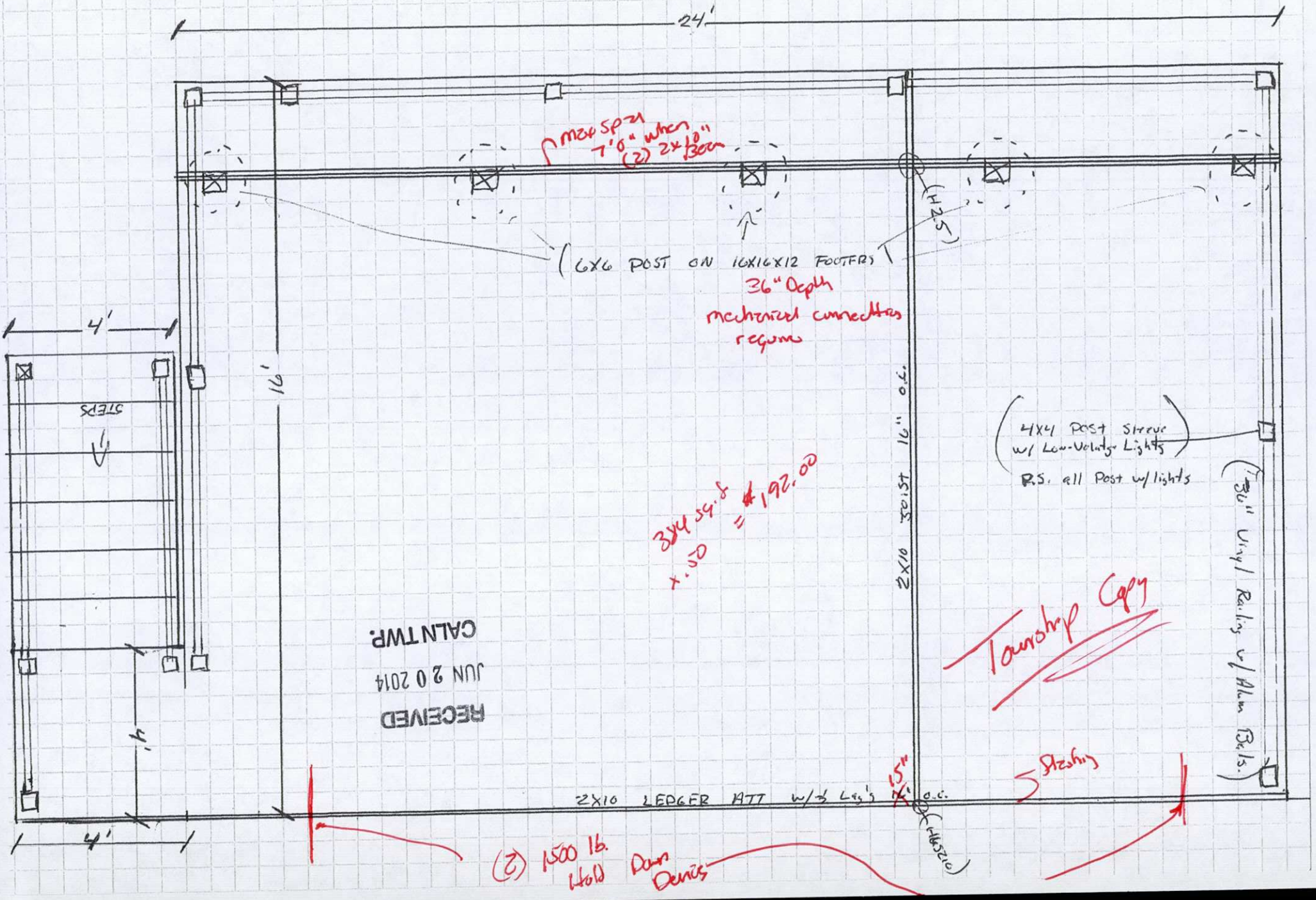

(Guard Rail Detail)

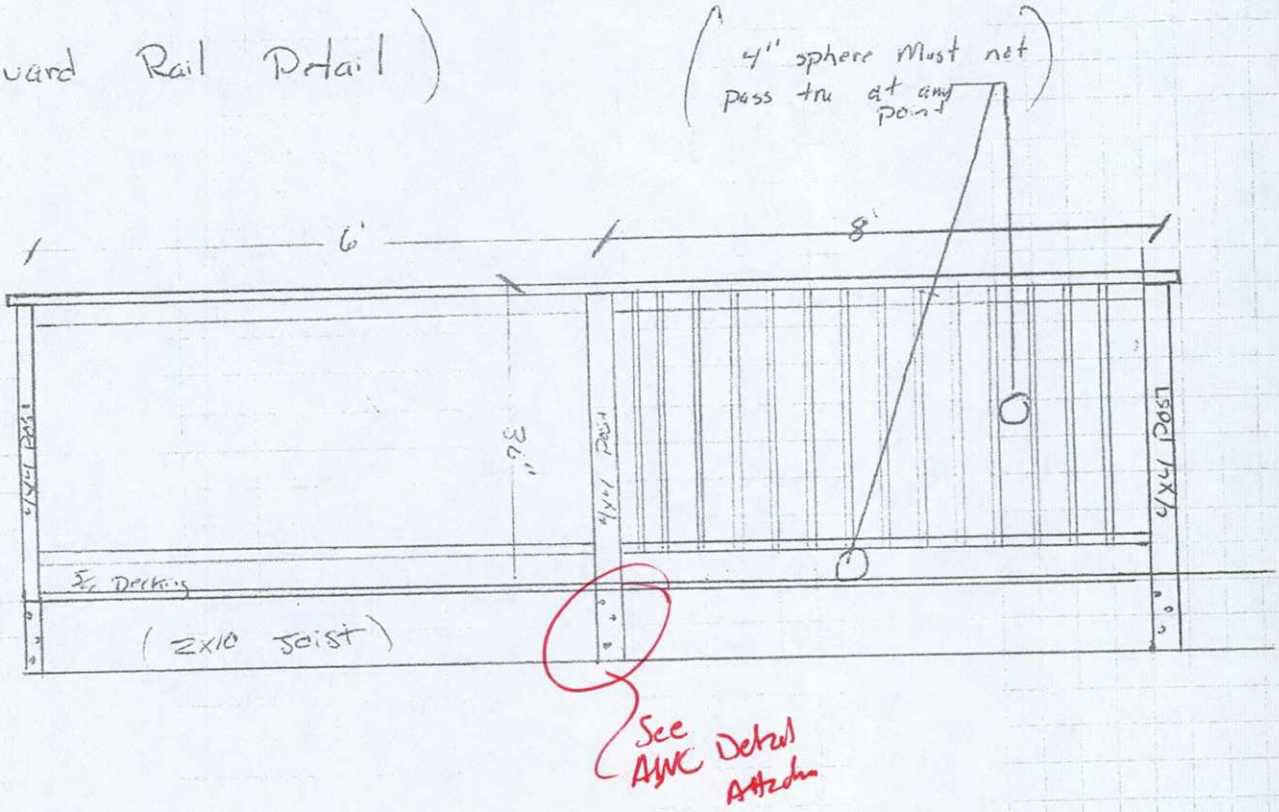

(Guard Rail & Beam Conn. is Attc.)

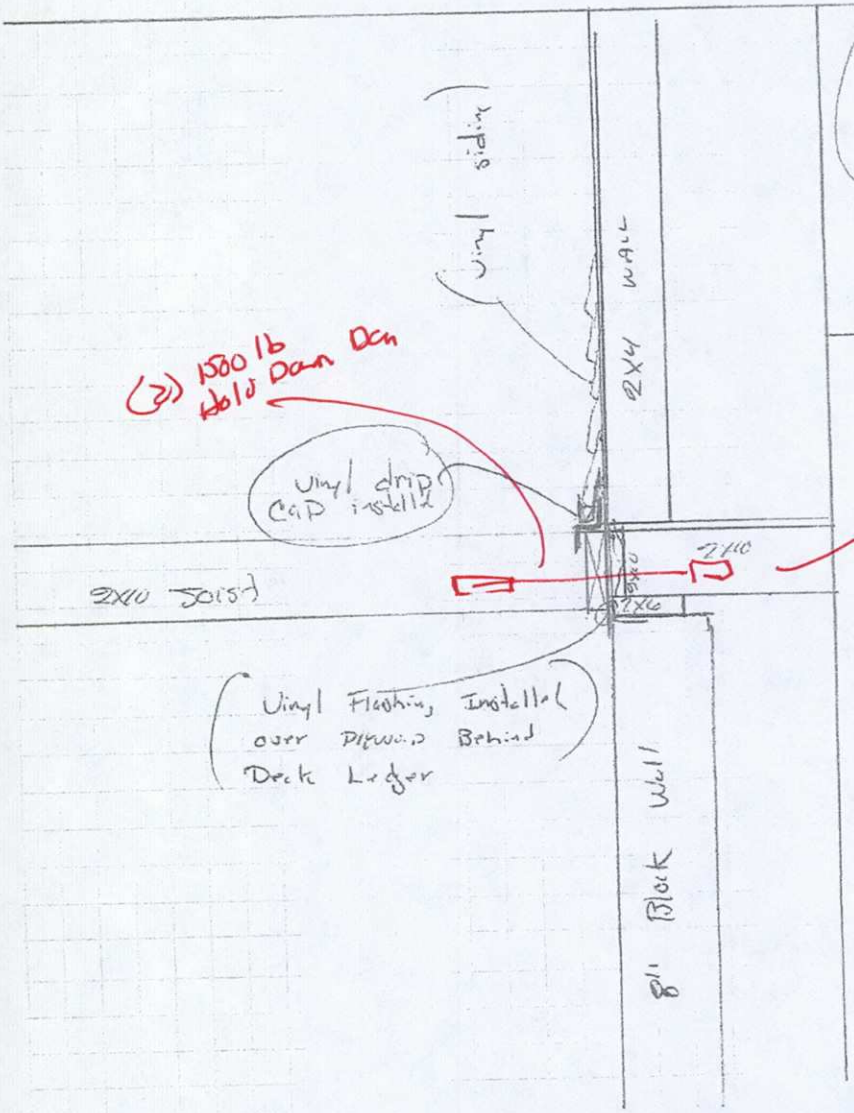

(Deck Tension Tie (2 per Deck))

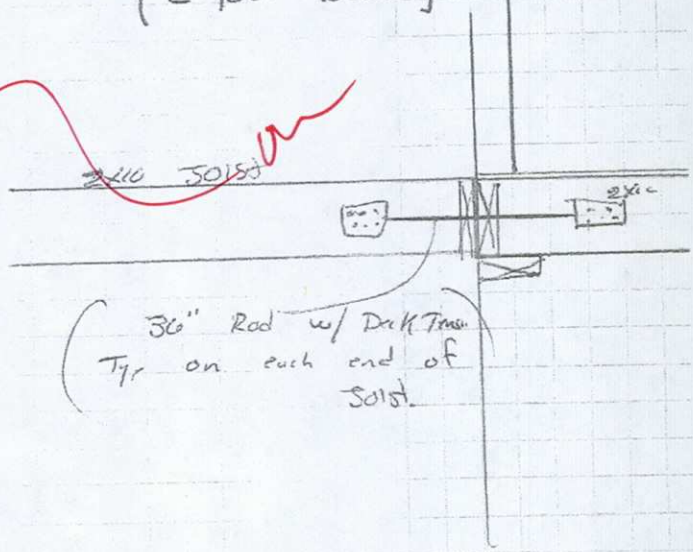

Release 2.2 www.chesco.org Help **Login**

ChescoViews

Metadata

Print Find Street Find Intersection

Map Scale: 55 Feet

Find Parcel By: Address Owner UPI PIN

Results | Address

Clear All

Find Address (1)

3429 - ALYDAR RD (1)

FLUCK KELLY E
3429 ALYDAR RD, CALN

Summary	FLUCK KELLY E 3429 ALYDAR RD, CALN
PARID	3904 07390000
UPI	39-4-739
Owner 1	FLUCK KELLY E
Owner 2	PIAZZA MATTHEW D
Mailing Address 1	3429 ALYDAR RD
Mailing Address 2	DOWNINGTOWN PA
Mailing Address 3	
ZIP Code	19335
Deed Book	8590
Deed Page	468
Deed Recorded Date	12/14/2012
Legal Desc 1	NS ALYDAR RD
Legal Desc 2	LOT 68E & DWG
Acres	
Square Feet	9000
Land Use (Asmnt)	R-10
Class	R
Lot Assessment	$30,520
Property Assessment	$158,780
Total Assessment	$189,300
Last Sale Price	$300,000
Assessment Date	12/20/2013
Property Address	3429 ALYDAR RD
Municipality	CALN
Street Concat	3429 ALYDAR RD
Fair Mkt Val Act 319	
Fair Mkt Val Act 515	
School District	COATESVILLE AREA

more..

Map Contents

PARCEL DIMENSIONS

GUARD POST ATTACHMENTS

Deck guard posts shall be a minimum 4x4 (nominal) with an adjusted bending design value not less than 1,100 psi.

Guard posts for guards which run parallel to the deck joists shall be attached to the outside joist per Figure 25. Guard posts for guards that run perpendicular to the deck joists shall be attached to the rim joist in accordance with Figure 26. Only hold down anchor models meeting these minimum requirements shall be used. Hold down anchors shall have a minimum allowable tension load of 1,800 pounds for a 36" maximum rail height and be installed in accordance with the manufacturer's instructions.

Figure 25. Guard Post to Outside Joist Example

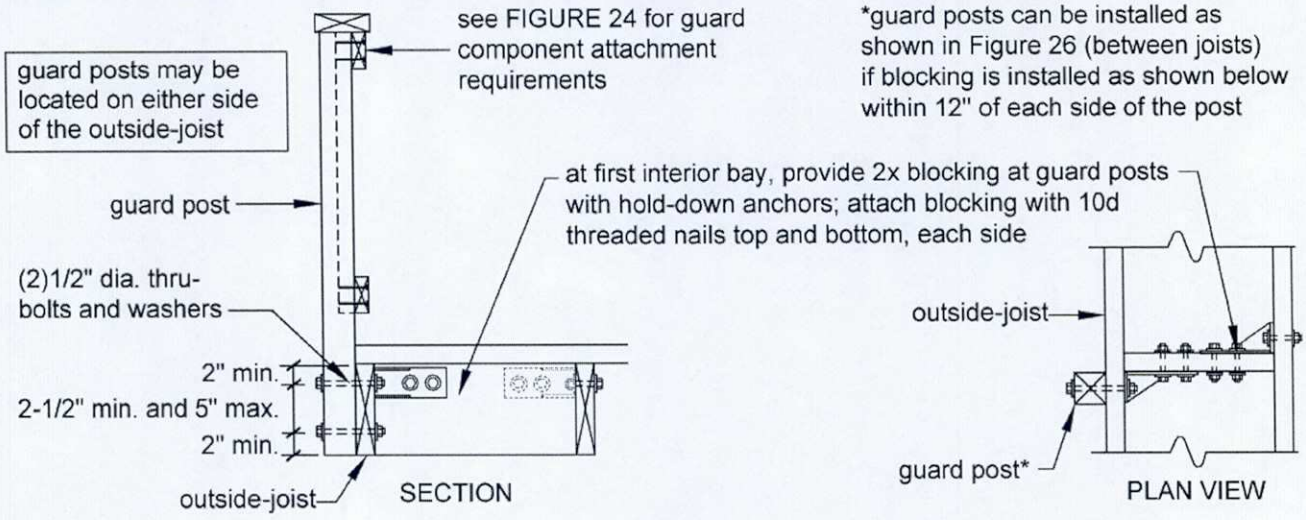

Figure 26. Guard Post to Rim Joist Example

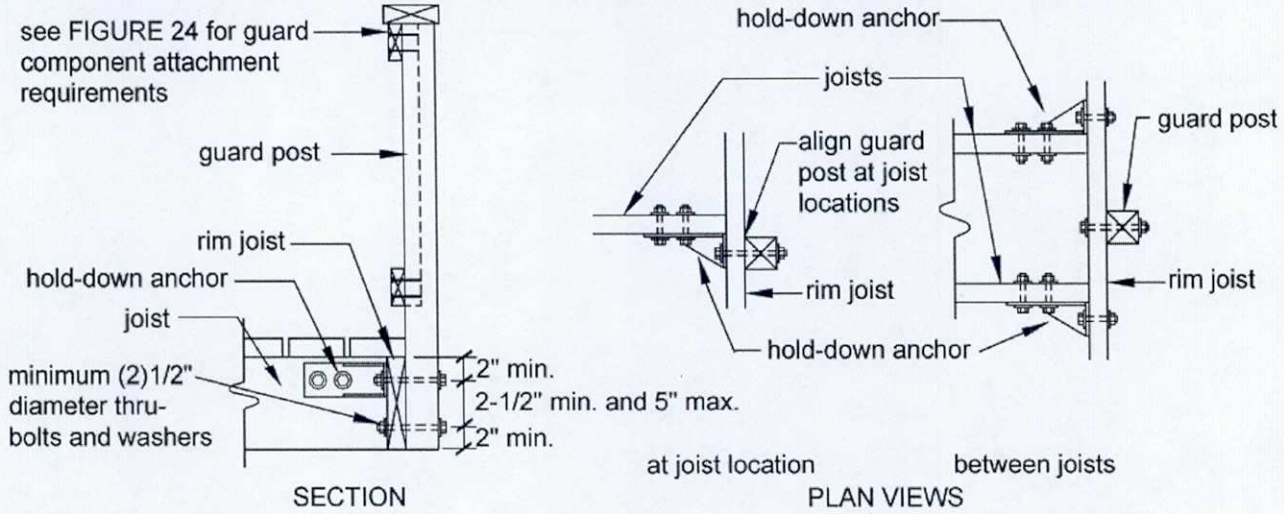

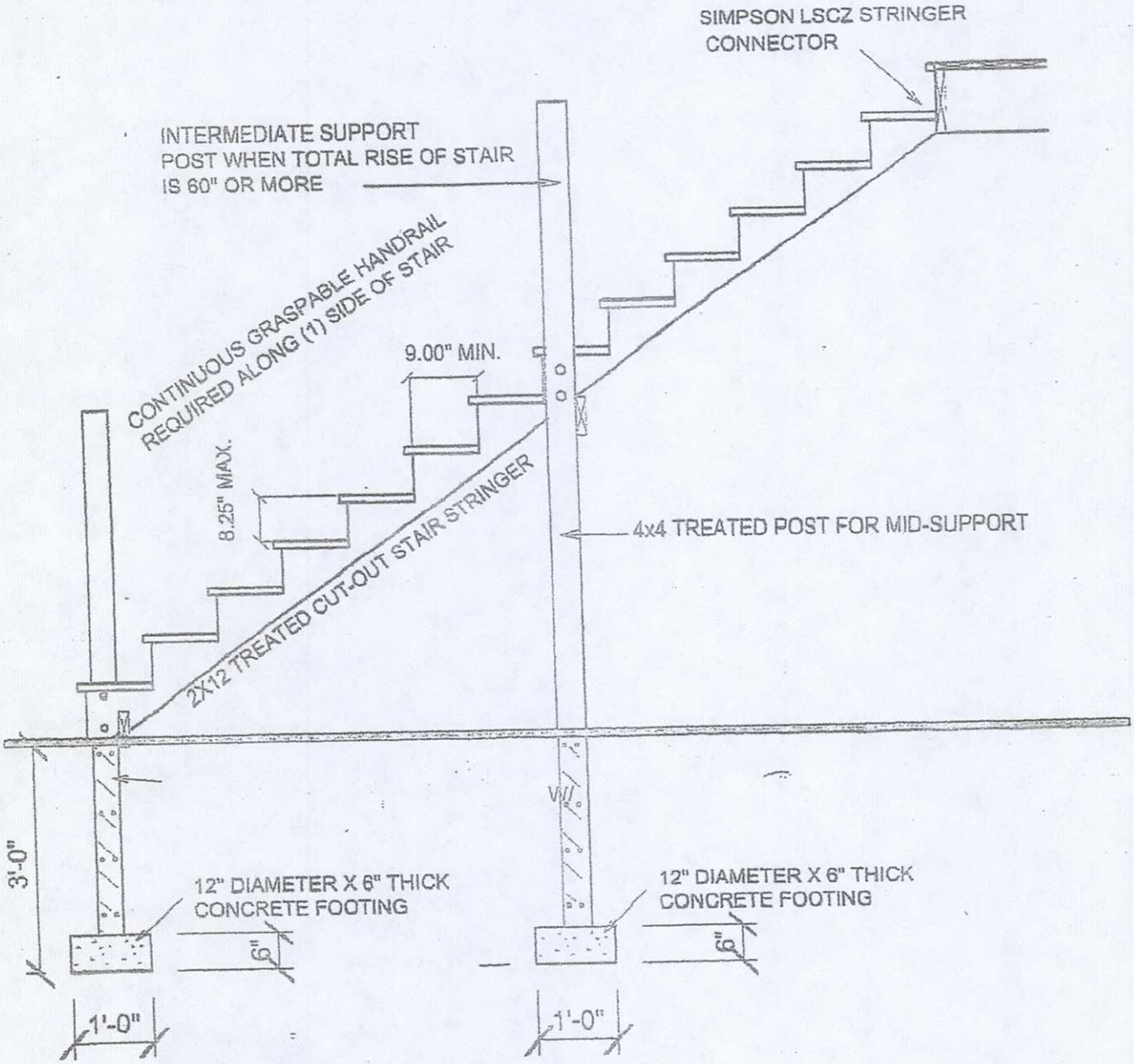

STAIR SECTION

SCALE: 1/2" = 1'-0"

DECK RAIL POST TO RIM BOARD

CONNECTION DETAILS

According to the 2009 *International Residential Code for One and Two-Family Dwellings*, Table R301.5 (ICC, 2009), guardrails and handrails must be designed to withstand a single concentrated load of 200 pounds in any direction. A critical part of this connection is making a strong connection between the guardrail post and the rim board of the deck. In most cases, a 1/2" through-bolt or carriage bolt is used to make this connection. When installed as instructed in this bulletin, the ThruLOK System can replace 1/2" bolts, meeting the 200 pound design load for this part of the connection.

APPLICATIONS

FastenMaster ThruLOK™ Screw Bolt Fastening System

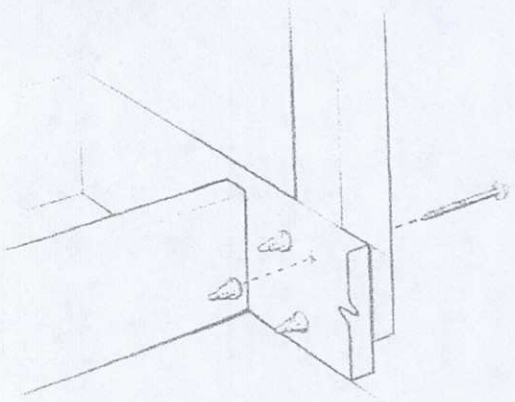

DECK POST TO SINGLE RIM JOIST

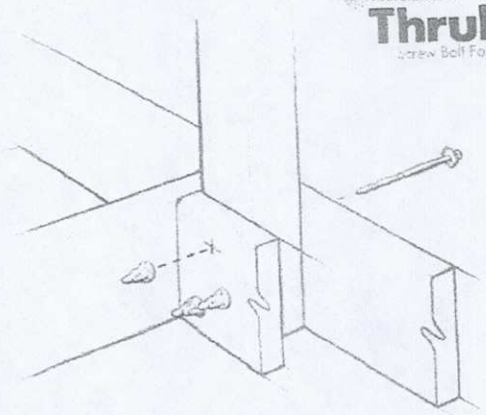

DECK POST TO DOUBLE RIM OR SINGLE RIM WITH BLOCKING

INSTALLATION INSTRUCTIONS

1. Choose the correct length (6 1/4" or 8") and fastening pattern for each post to rim application based on the illustrated conditions.
2. Mark the surface of the wood with the correct pattern.
3. If a flush mounted head is required, use a 1 1/4" spade bit to create a 1/4" deep recess in the rim or post.
4. Remove the pre-assembled ThruLOK nut from the screw and using a 1/2" drill on low speed/high torque setting, install the ThruLOK screw and washer into the outside face of the application until the screw is 1/4" to 1/8" from being flush.
5. Thread the ThruLOK nut onto the exposed threaded end of the fastener. Firmly twist on the nut by hand until snug.
6. Return to driving the screw in the remaining 1/4" to 1/8" until the washer and nut are firmly drawn together.
7. Make sure that the point of the ThruLOK fastener has passed the "MIN LINE" printed on the nut.
8. Repeat until all of the fasteners are installed correctly according to the specifications contained in this bulletin.

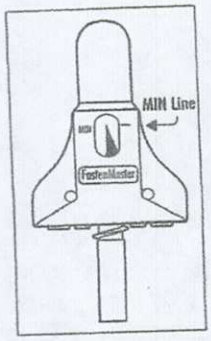

CONDITION 1 – EXTERIOR MOUNTED 4X4 POST TO 2X RIM

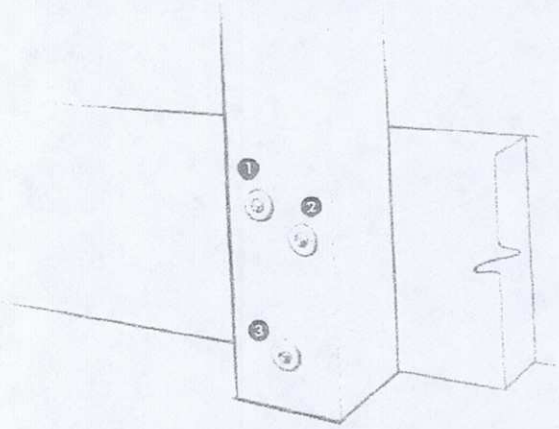

For this condition, use the 6¼" ThruLOK fastener

1. Install first screw 1" in from the edge of the post and 2" (+/- 1/4") from the top of the rim board
2. Install second screw 1" in from the other edge of the post and 3" (+/- 1/4") from the top of the rim board
3. Install third screw in the center of the post and 2" (+/- 1/4") from the bottom of the rim board

CONDITION 2 – INTERIOR MOUNTED 4X4 POST TO 2X RIM

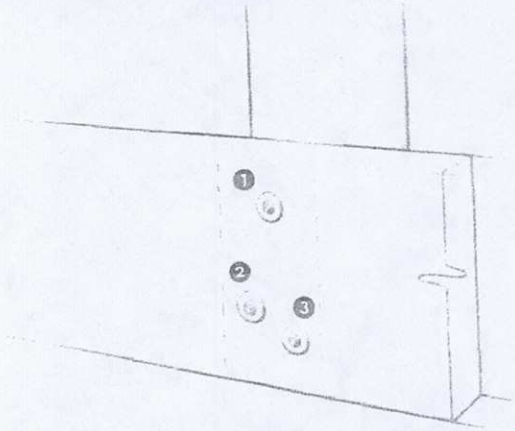

For this condition, use the 6 1/4" ThruLOK fastener

1. Install first screw in the center of the post and 2" (+/- 1/4") from the top of the rim board
2. Install second screw 1" in from the other edge of the post and 3" (+/- 1/4") from the bottom of the rim board
3. Install third screw 1" in from the edge of the post and 2" (+/- 1/4") from the bottom of the rim board

CONDITION 3 – INTERIOR MOUNTED 4X4 CORNER POST TO 2X RIM

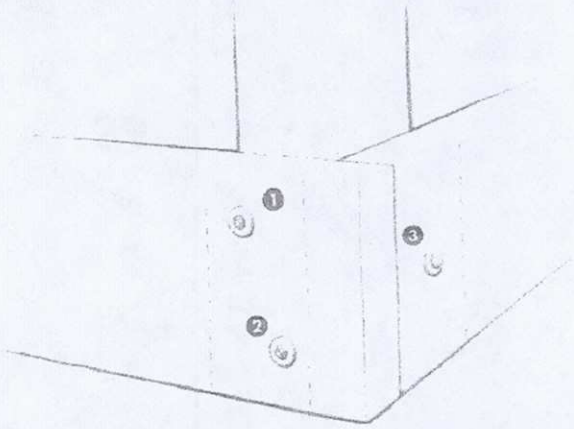

For this condition, use the 6 1/4" ThruLOK fastener

1. Install first screw 1" in from the edge of the post and 2" (+/- 1/4") from the top of the rim board
2. Install second screw 1" in from the other edge of the post and 2" (+/- 1/4") from the bottom of the rim board
3. Install third screw centered on both the post and the rim board

CONDITION 4 – EXTERIOR MOUNTED 4X4 POST TO DOUBLE 2X RIM

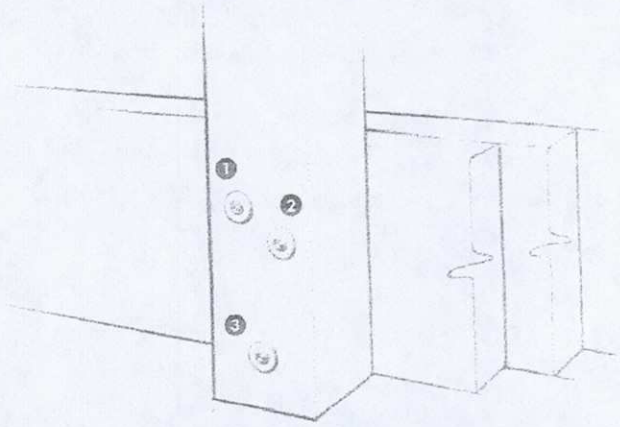

For this condition, use the 8" ThruLOK fastener

1. Install first screw 1" in from the edge of the post and 2" (+/- 1/4") from the top of the rim boards
2. Install second screw 1" in from the other edge of the post and 3" (+/- 1/4") from the top of the rim boards
3. Install third screw in the center of the post and 2" (+/- 1/4") from the bottom of the rim boards

CONDITION 5 – INTERIOR MOUNTED 4X4 POST TO DOUBLE 2X RIM

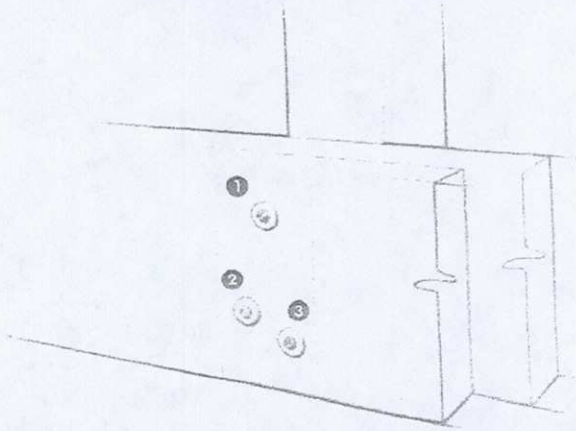

For this condition, use the 8" ThruLOK fastener

1. Install first screw in the center of the post and 2" (+/- 1/4") from the top of the rim boards
2. Install second screw 1" in from the edge of the post and 3" (+/- 1/4") from the bottom of the rim boards
3. Install third screw 1" in from the other edge of the post and 2" (+/- 1/4") from the bottom of the rim boards

CONDITION 6 – INTERIOR MOUNTED 4X4 CORNER POST TO DOUBLE 2X RIM

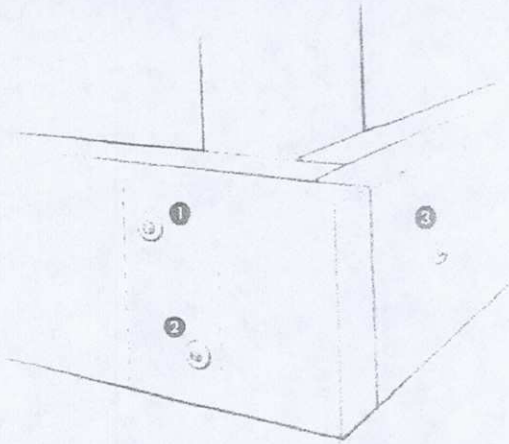

For this condition, use the 8" ThruLOK fastener

1. Install first screw 1" in from the edge of the post and 2" (+/- 1/4") from the top of the rim boards
2. Install second screw 1" in from the other edge of the post and 2" (+/- 1/4") from the bottom of the rim boards
3. Install third screw centered on both the post and the rim boards

CONDITION 7 – INTERIOR MOUNTED 4X4 POST TO 2X RIM WITH BLOCKING

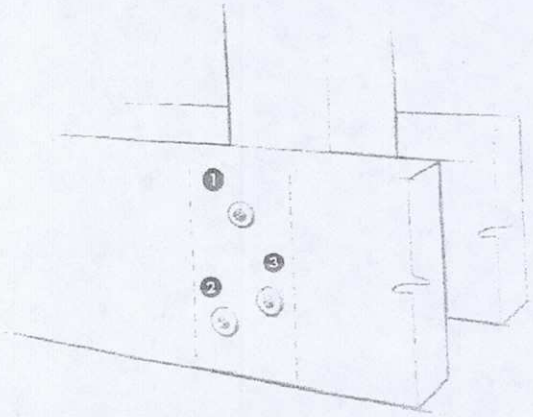

For this condition, use the 8" ThruLOK fastener

1. Install first screw in the center of the post and 2" (+/- 1/4") from the top of the rim board
2. Install second screw 1" in from the edge of the post and 2" (+/- 1/4") from the bottom of the rim board
3. Install third screw 1" in from the other edge of the post and 3" (+/- 1/4") from the bottom of the rim board

CONDITION 8 – INTERIOR MOUNTED 4X4 POST TO 2X RIM WITH SIDE BLOCKING

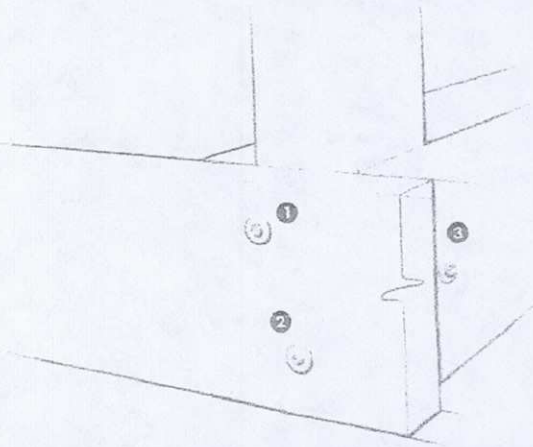

For this condition, use two, 6 1/4" and one, 8" ThruLOK fasteners

1. Install first 6 1/4" screw 1" in from the edge of the post and 2" (+/- 1/4") from the top of the rim board
2. Install second 6 1/4" screw 1" in from the other edge of the post and 2" (+/- 1/4") from the bottom of the rim board
3. Install 8" screw centered on both the post and the rim board

GENERAL FASTENING GUIDELINES

Design values used to create the fastening patterns in this bulletin were derived from individual fastener testing under ICC Acceptance Criteria AC233 and reported in ICC-ES Evaluation Report ESR #1078. Full scale testing of the deck rail post to deck frame connections were also conducted by an accredited third party to support these details.

The connection details shown in this bulletin apply specifically to 4x4 posts and 2x8, 2x10 or 2x12 rims and/or joists.

For different dimension lumber, wood species of lower density than Hem Fir (SYP and DF are higher density and therefore approved), or post heights greater than 37.5" off the top of the joists, please contact FastenMaster to determine the proper fastening solution.

ThruLOK is coated with mechanically applied zinc in accordance with ASTM B695, Class 55. This is compliant with the 2006 International Residential Code® (R319.3) and 2009 IRC (R317.1.3) for use in ACQ pressure treated wood.

As with other bolted connections using wet treated wood, the nut should be inspected and tightened if needed after initial drying period.

The connection details in this bulletin are an acceptable means of transferring the load from guard post to rim joist only. Additional blocking or hardware may be required to transfer loads from the rim to deck joists.

Fastening patterns assume the following: All components are used (screw, washer and nut), holes are not pre-drilled, and posts are loaded in an outward direction from the deck.

For questions regarding these or other connections, please contact FastenMaster Technical Support at www.fastenmaster.com or by calling 800-518-3569.

FMTECH-THRPOST (0114)

FastenMaster® and ThruLOK® are trademarks of OMG, Inc.
Copyright © 2014 OMG, Inc. All rights reserved.

CARRYING BEAM TO NOTCHED SUPPORT POST

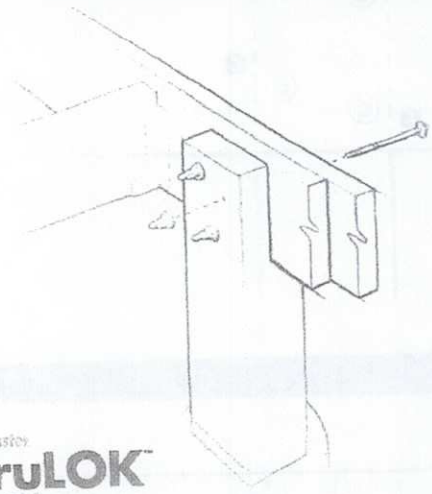

FastenMaster ThruLOK Screw Bolt

CONNECTION DETAILS

A commonly accepted, code-compliant method of deck construction allows for carrying beams and notched 6x6 support posts to be bolted together. According to the International Residential Code (IRC R502.9), "where posts and beam or girders construction is used to support floor framing, positive connections shall be provided to ensure against uplift and lateral displacement." When installed as shown in this bulletin, the 7" FastenMaster ThruLOK restrains against both of these forces equal to traditionally bolted connections with a faster and easier method of installation.

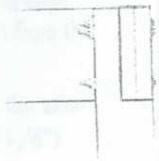

INSTALLATION INSTRUCTIONS

1. Choose the correct fastening pattern based on one of the three conditions listed on this bulletin.
2. Separate the 7" ThruLOK screw and washer from the nut.
3. Using a 1/2" drill on low speed/high torque setting, install the ThruLOK screw and washer into the outside face of the application until the screw is 1/4" to 1/8" from being flush.
4. Install the ThruLOK nut onto the exposed threaded end of the fastener. Firmly twist on the nut by hand until snug.
5. Return to driving the screw in the remaining 1/4" to 1/8" until the washer and nut are firmly drawn together.
6. Make sure that the point of the ThruLOK fastener has passed the "MIN LINE" printed on the nut. Drive the screw in the remaining 1/4" to 1/8" until the washer and nut are firmly drawn together.
7. Repeat until all of the fasteners are installed correctly according to the specifications contained in this bulletin.

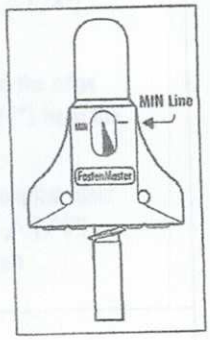

CONDITION 1 – CONTINUOUS BEAM REPLACING 2 BOLTS OF ½" DIAMETER

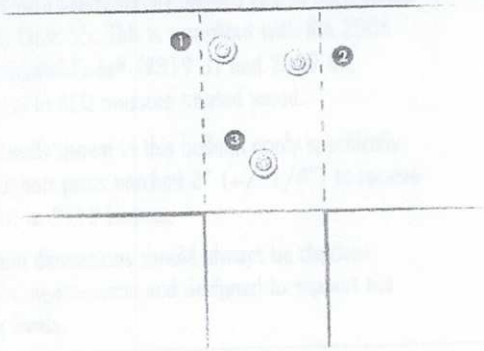

1. Install first screw 1" in from the edge of the post and 2" (+/- 1/4") from the top of the beam
2. Install second screw 1" in from the other edge of the post and 3" (+/- 1/4") from the top of the beam
3. Install third screw in the center of the post and 2" (+/- 1/4") from the bottom of the beam

Commonwealth of Pennsylvania

Office of Attorney General

THIS IS TO CERTIFY THAT

SMUCKER BROTHERS CONSTRUCTION LLC
1330 SHEEP HILL ROAD
EAST EARL PA 17519

HAS REGISTERED IN PENNSYLVANIA AS A HOME IMPROVEMENT CONTRACTOR

8/13/2015
VALID UNTIL

PA083776
REGISTRATION NUMBER

SIGNATURE OF REGISTRATION CERTIFICATE HOLDER

Kathleen G. Kane
KATHLEEN G. KANE, PENNSYLVANIA ATTORNEY GENERAL

RECEIVED
JUN 20 2014
CALN TWP.

Caln Township
Caln Twp. Municipal Authority
253 Municipal Drive
Thorndale,PA 19372

INVOICE #
14-00332

INVOICE DATE: 06/20/14
DUE DATE: 07/20/14

ACCOUNT ID: SMUCKER1
SMUCKER BROTHERS CONSTRUCTION
1330 SHEEP HILL RD
EAST EARL, PA 17519

PERMIT INFORMATION
PERMIT NO: 14-00403
LOCATION: 3429 ALYDAR RD

QUANTITY/UNIT	SERVICE ID	DESCRIPTION	UNIT PRICE	AMOUNT
		Permit No: 14-00403		
1.0000	RC-DECK	DECK MINIMUM Permit No: 14-00403	100.00000	100.00
			TOTAL DUE:	$ 100.00

PAID
JUN 20 2014
CODES

PAYMENT COUPON - PLEASE DETACH AND RETURN THIS PORTION ALONG WITH YOUR PAYMENT

Caln Township
Caln Twp. Municipal Authority
253 Municipal Drive
Thorndale,PA 19372

INVOICE #: 14-00332
DESCRIPTION: Permit No: 14-00403
ACCOUNT ID: SMUCKER1
DUE DATE: 07/20/14
TOTAL DUE: $ 100.00

SMUCKER BROTHERS CONSTRUCTION
1330 SHEEP HILL RD
EAST EARL, PA 17519

CALN TOWNSHIP
DEPARTMENT OF CODE ENFORCEMENT
Andrew F. Reczek, Director of Code Enforcement
Stephen L. Miller, Code Official / Fire Marshal
Raymond Stackhouse, Code Official / Deputy Fire Marshal
Joseph Arvay, Code Official / Housing Inspector
610.384.0600 fax: 610.384.0689 Email: areczek@calntownship.org
253 Municipal Drive, P.O. Box 72149 Thorndale, Pa 19372-0149
www.calntownship.org

June 25, 2014

Matt Piazza
3429 Alydar Rd.
Downingtown, PA 19335

PERMIT REVIEW: Building Permit / Accessory Deck (384 sq.ft)

1. All work shall comply with the 2009 International Residential Code and the Caln Township Zoning Code.
2. **Deck structure shall maintain the minimum 20' rear yard setback in accordance with the R-3 setback requirements and Sections 155-56 D & 155-116 A (5).**
3. All new deck footings shall be placed on firm and stable soils at a minimum depth of 36" below grade. Attachment shall be provided at the connection between post and footing to prevent uplift.
4. (2) 2" x10" beam is permitted to span a maximum 7'0" in accordance with Table R502.5 (2). Bearing and attachment shall be provided at each supporting post.
5. 2" x 10" floor joists, SPF #2, 16" on center shall be limited to 15'5" span; Joist cantilevers shall not exceed 2'. Adequate bearing shall be provided for all joist members. Joist hangers shall be provided as required for bearing
6. **Ledger shall be connected to the primary structure using a minimum ½" lag screw space not more than 13"o.c. The tip of the lag screw shall penetrate the interior of the band board.**
7. **Lateral bracing shall be provided at the POST / BEAM connections to prevent lateral movement.**
8. **Provide two 1,500 lb. Hold Down Tension Devices shall be provided in accordance with Section R502.2.2.3**
9. Composite decking shall be installed in accordance with the manufacture's specification.
10. Flashing shall be provided at the connection between ledger board and the main structure.
11. **Riser heights at exterior doors shall not exceed 7 ¾"**
12. **Stair risers shall not exceed 8 ¼ " in height, Tread depths shall not be less than 9". All risers shall be enclosed and shall not differ in height more than 3/8"**
13. **Guard railings are required on all raised surfaces (decks, ramps or patios) 30" or greater above grade and on all open sides of stairways with 4 or more risers. Guard Railings shall be a minimum 36" in height and be capable of preventing the passage of a 4" sphere. Guards shall support a 200 lb. lateral load at any point along the top rail in accordance with the American Wood Council detail attached**
14. Contractors shall be properly registered with the Commonwealth of Pennsylvania Attorney General's office
15. **Inspections shall be scheduled allowing a minimum of 24-hr notice by calling 610-384-0600. Required inspections include; 1) Site, 2) Footings prior to pour, 3) Rough Framing, 4) Final**

GUARD POST ATTACHMENTS

Deck guard posts shall be a minimum 4x4 (nominal) with an adjusted bending design value not less than 1,100 psi.

Guard posts for guards which run parallel to the deck joists shall be attached to the outside joist per Figure 25. Guard posts for guards that run perpendicular to the deck joists shall be attached to the rim joist in accordance with Figure 26. Only hold down anchor models meeting these minimum requirements shall be used. Hold down anchors shall have a minimum allowable tension load of 1,800 pounds for a 36" maximum rail height and be installed in accordance with the manufacturer's instructions.

Figure 25. Guard Post to Outside Joist Example

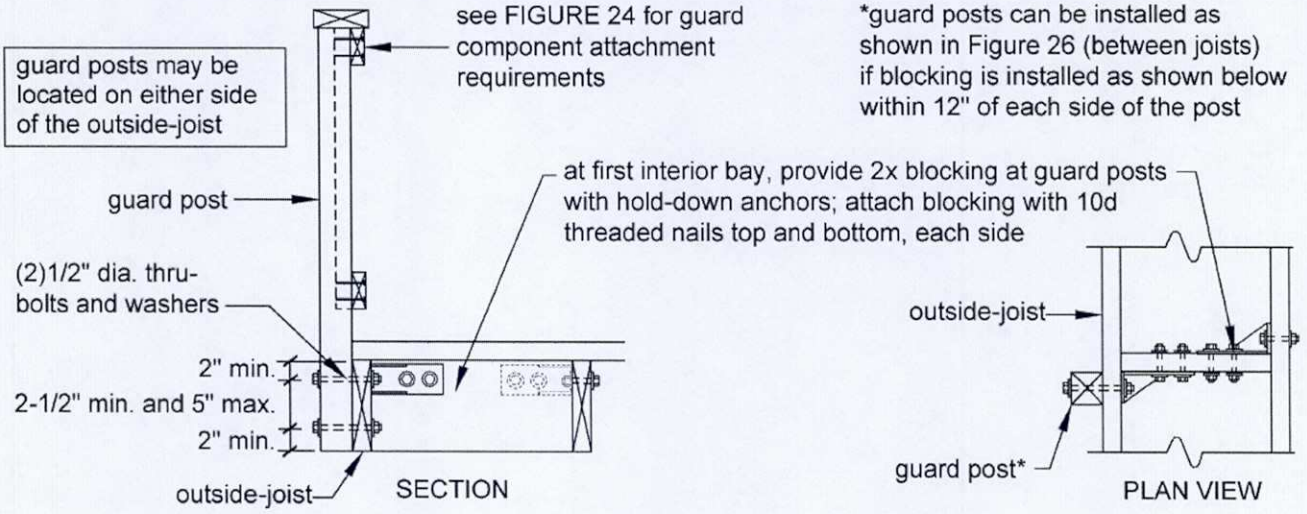

Figure 26. Guard Post to Rim Joist Example

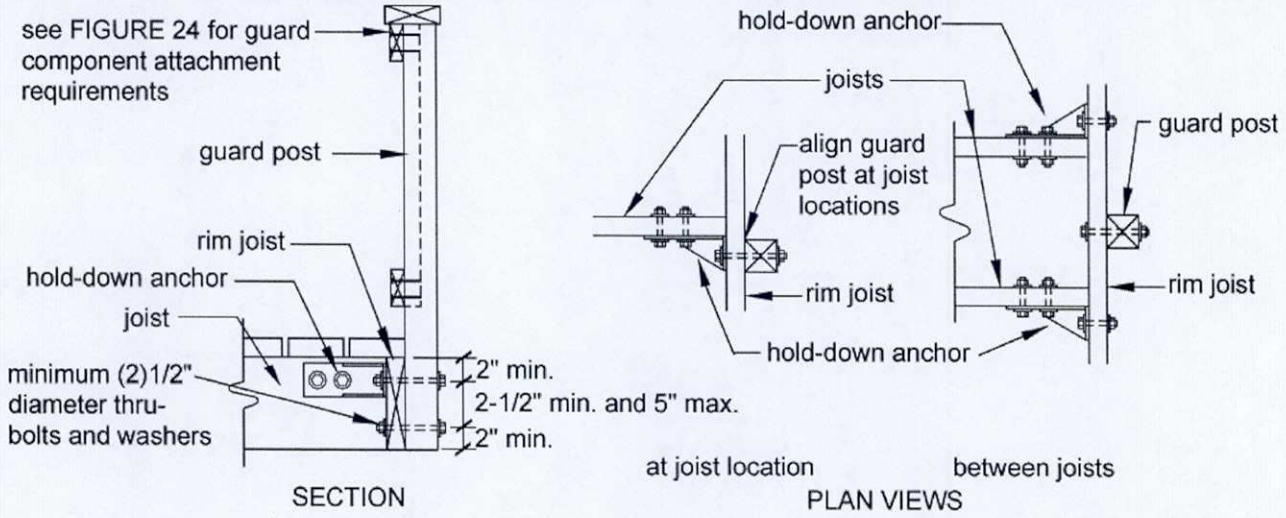

GUARD POST ATTACHMENTS

Deck guard posts shall be a minimum 4x4 (nominal) with an adjusted bending design value not less than 1,100 psi.

Guard posts for guards which run parallel to the deck joists shall be attached to the outside joist per Figure 25. Guard posts for guards that run perpendicular to the deck joists shall be attached to the rim joist in accordance with Figure 26. Only hold down anchor models meeting these minimum requirements shall be used. Hold down anchors shall have a minimum allowable tension load of 1,800 pounds for a 36" maximum rail height and be installed in accordance with the manufacturer's instructions.

Figure 25. Guard Post to Outside Joist Example

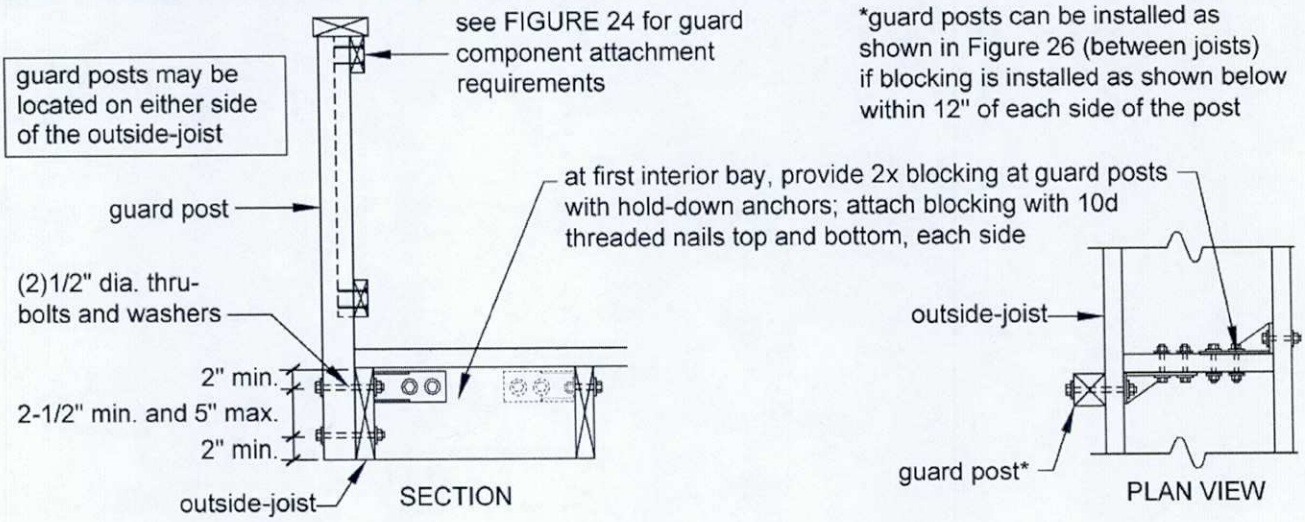

Figure 26. Guard Post to Rim Joist Example

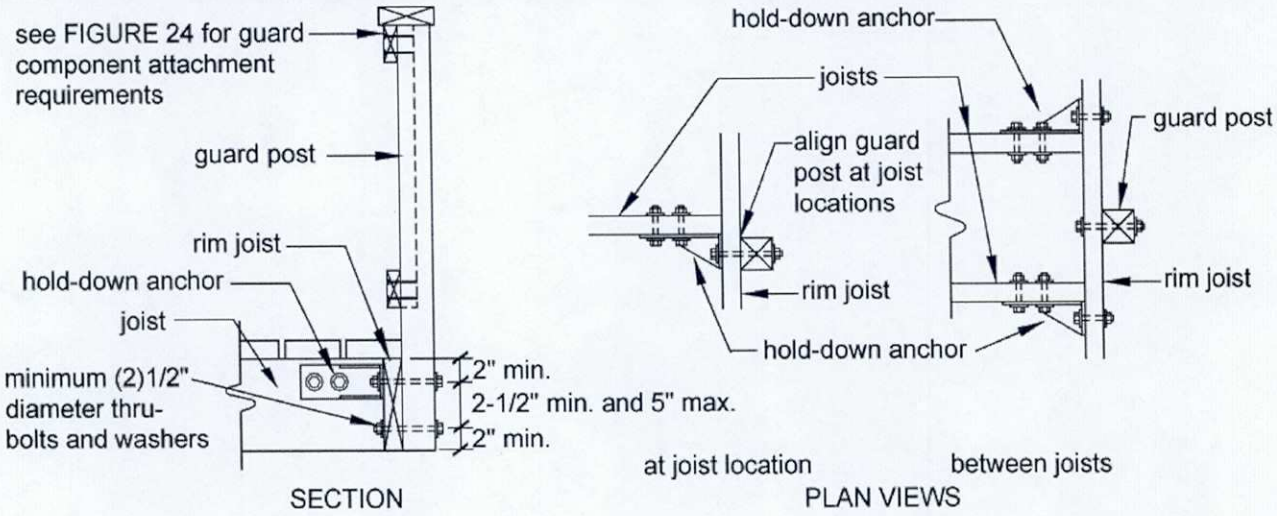

Matt & Kelly
3428 Alyder RD
Downingtown PA

Decking = Timbertech (Silver Maple)

Railing's = Vinyl Railing (w/ Alum. Spindles)

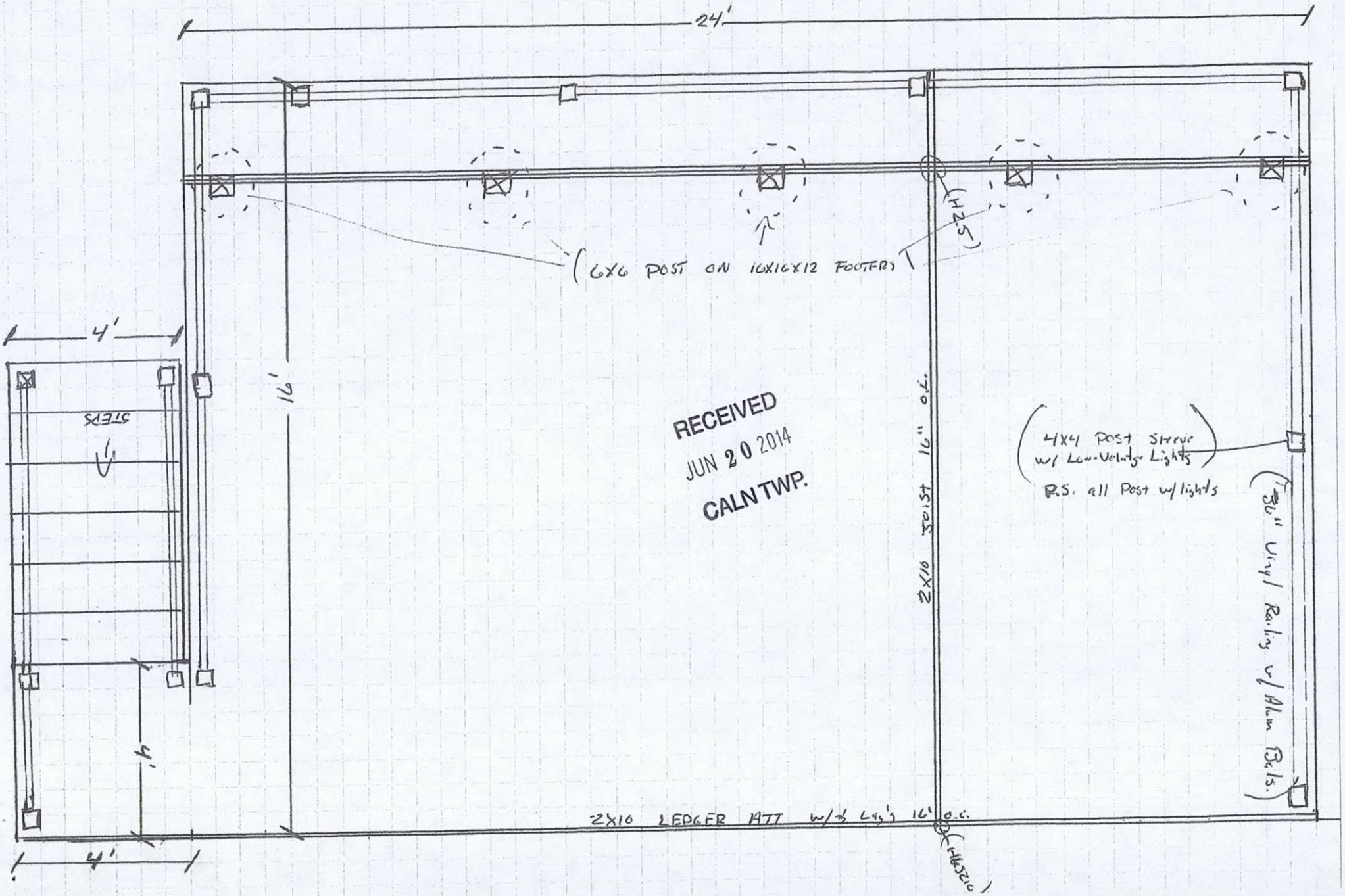

RECEIVED
JUN 20 2014
CALN TWP.

(Guard Rail Detail)

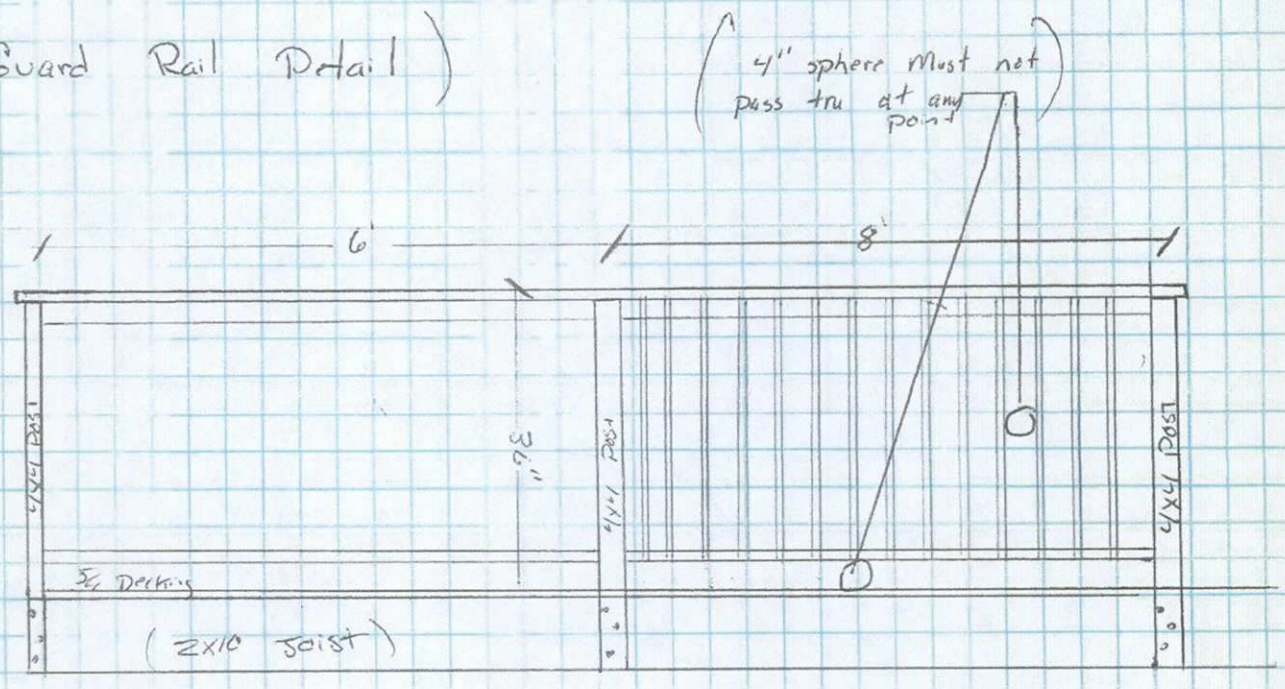

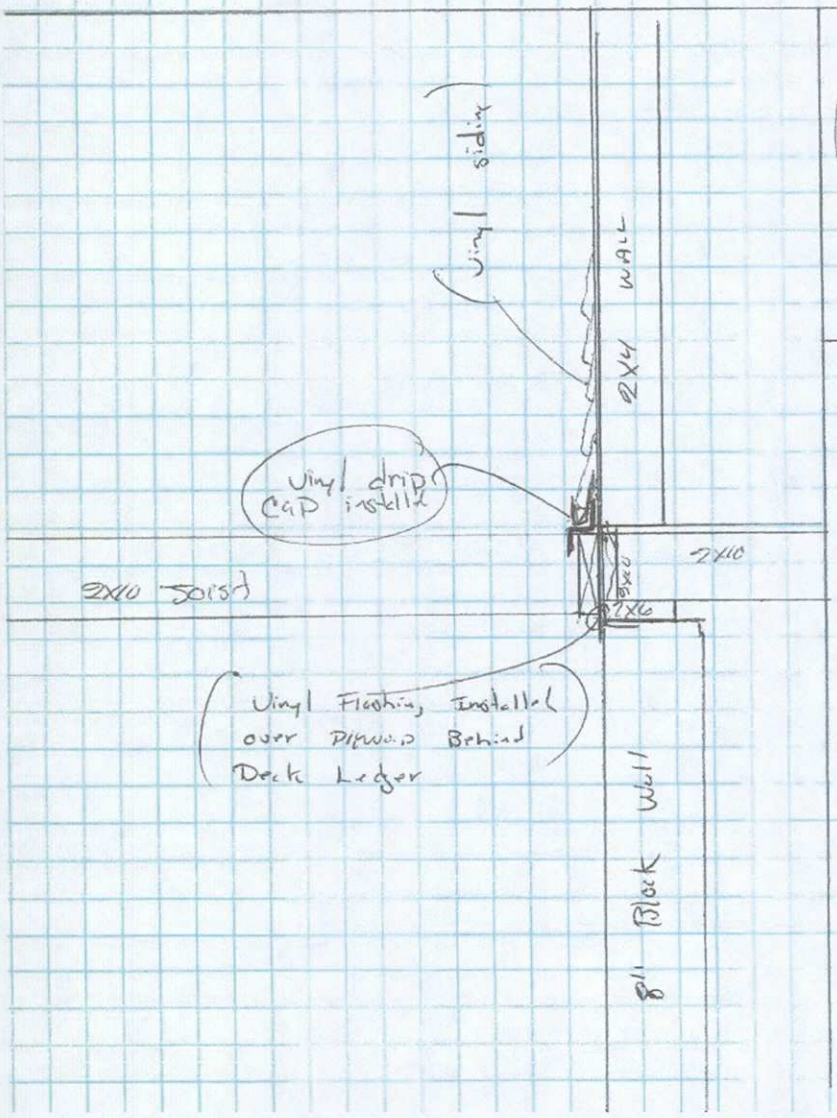

(Guard Rail & Beam Conne. is Attc.)

(Deck Tension Tye (2 per Deck))

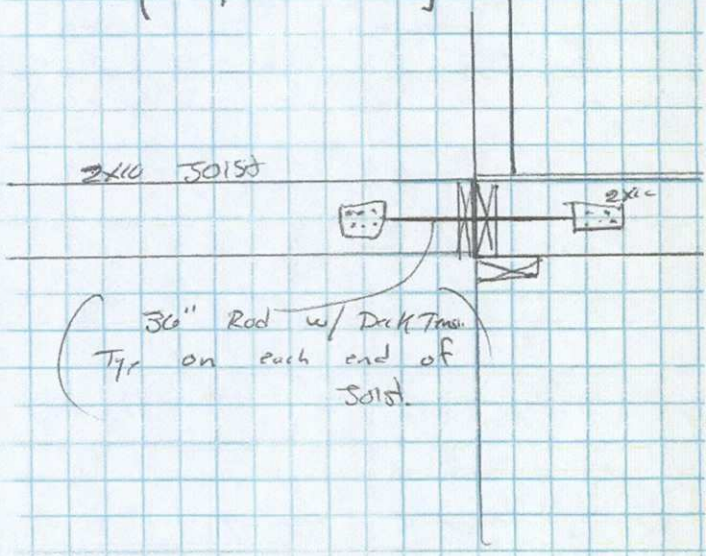

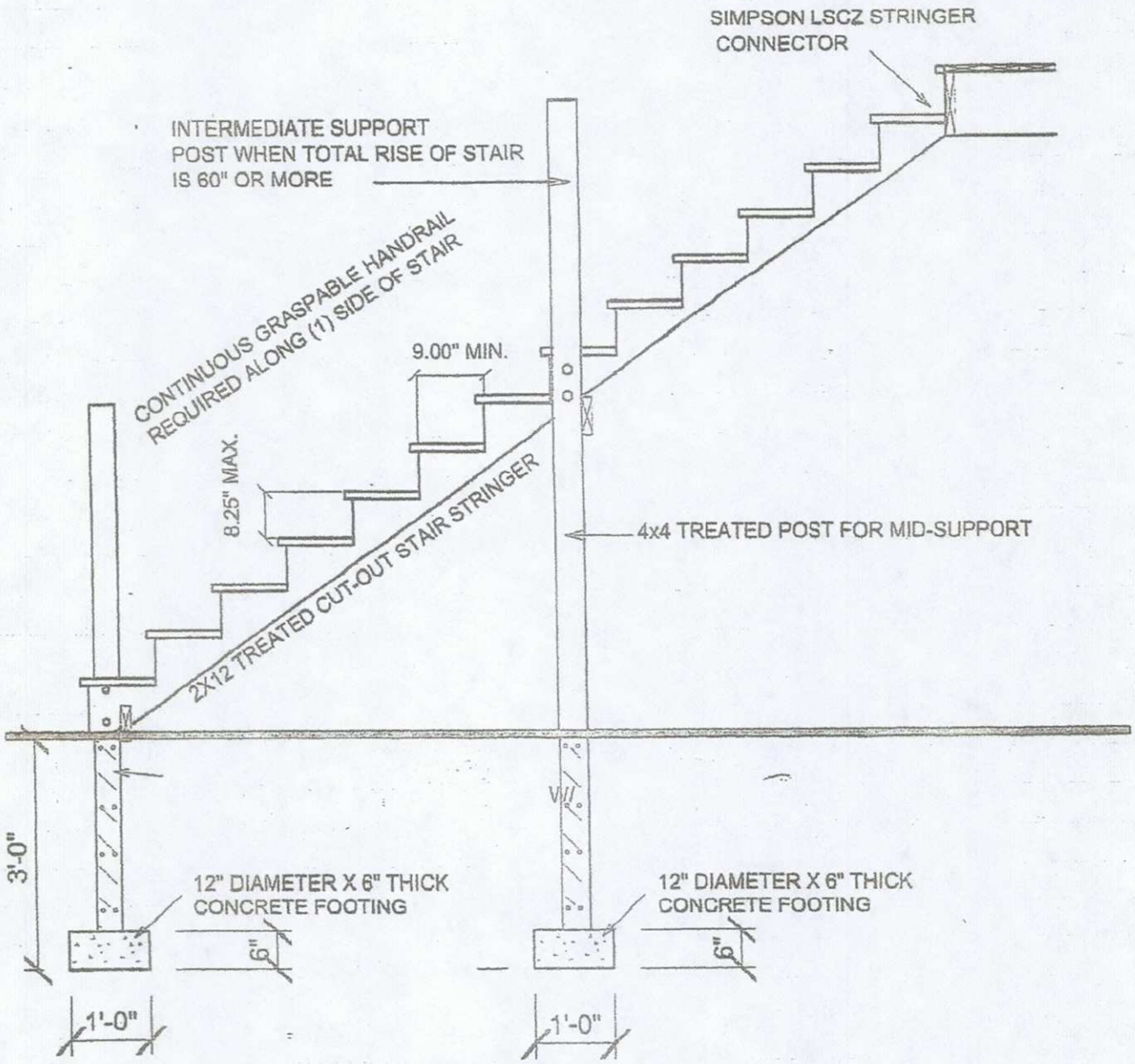

STAIR SECTION

SCALE: 1/2" = 1'-0"

DECK RAIL POST TO RIM BOARD

CONNECTION DETAILS

According to the 2009 *International Residential Code for One and Two-Family Dwellings*, Table R301.5 (ICC, 2009), guardrails and handrails must be designed to withstand a single concentrated load of 200 pounds in any direction. A critical part of this connection is making a strong connection between the guardrail post and the rim board of the deck. In most cases, a 1/2" through-bolt or carriage bolt is used to make this connection. When installed as instructed in this bulletin, the ThruLOK System can replace 1/2" bolts, meeting the 200 pound design load for this part of the connection.

APPLICATIONS

FastenMaster ThruLOK™ Screw Bolt Fastening System

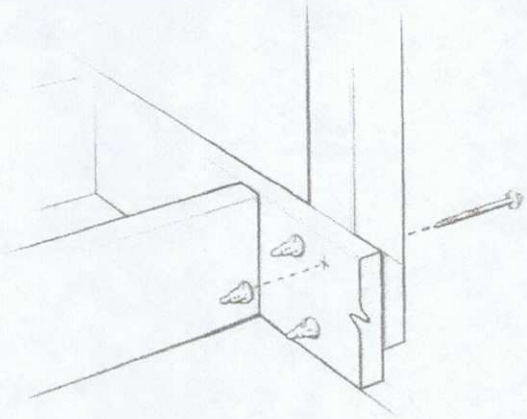

DECK POST TO SINGLE RIM JOIST

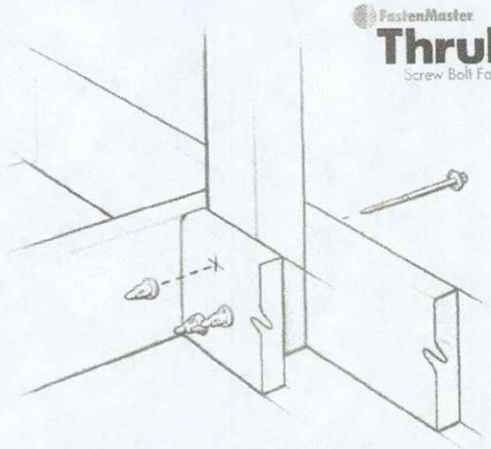

DECK POST TO DOUBLE RIM OR SINGLE RIM WITH BLOCKING

INSTALLATION INSTRUCTIONS

1. Choose the correct length (6 1/4" or 8") and fastening pattern for each post to rim application based on the illustrated conditions.
2. Mark the surface of the wood with the correct pattern.
3. If a flush mounted head is required, use a 1 1/4" spade bit to create a 1/4" deep recess in the rim or post.
4. Remove the pre-assembled ThruLOK nut from the screw and using a 1/2" drill on low speed/high torque setting, install the ThruLOK screw and washer into the outside face of the application until the screw is 1/4" to 1/8" from being flush.
5. Thread the ThruLOK nut onto the exposed threaded end of the fastener. Firmly twist on the nut by hand until snug.
6. Return to driving the screw in the remaining 1/4" to 1/8" until the washer and nut are firmly drawn together.
7. Make sure that the point of the ThruLOK fastener has passed the "MIN LINE" printed on the nut.
8. Repeat until all of the fasteners are installed correctly according to the specifications contained in this bulletin.

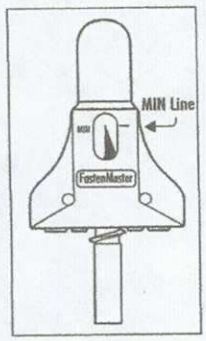

CONDITION 1 – EXTERIOR MOUNTED 4X4 POST TO 2X RIM

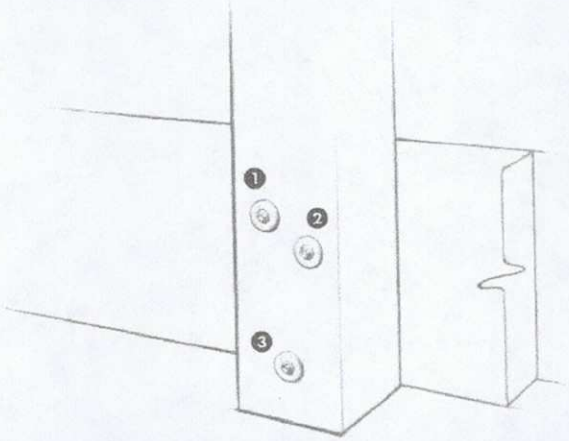

For this condition, use the 6¼" ThruLOK fastener

1. Install first screw 1" in from the edge of the post and 2" (+/- 1/4") from the top of the rim board
2. Install second screw 1" in from the other edge of the post and 3" (+/- 1/4") from the top of the rim board
3. Install third screw in the center of the post and 2" (+/- 1/4") from the bottom of the rim board

CONDITION 2 – INTERIOR MOUNTED 4X4 POST TO 2X RIM

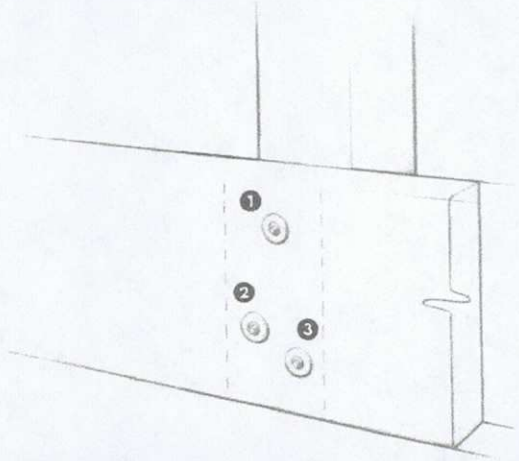

For this condition, use the 6 1/4" ThruLOK fastener

1. Install first screw in the center of the post and 2" (+/- 1/4") from the top of the rim board
2. Install second screw 1" in from the other edge of the post and 3" (+/- 1/4") from the bottom of the rim board
3. Install third screw 1" in from the edge of the post and 2" (+/- 1/4") from the bottom of the rim board

CONDITION 3 – INTERIOR MOUNTED 4X4 CORNER POST TO 2X RIM

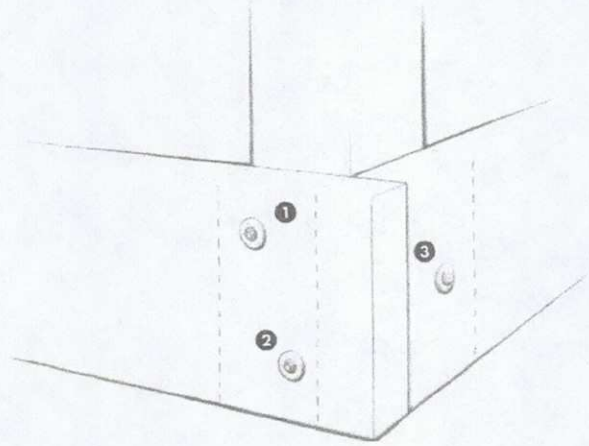

For this condition, use the 6 1/4" ThruLOK fastener

1. Install first screw 1" in from the edge of the post and 2" (+/- 1/4") from the top of the rim board
2. Install second screw 1" in from the other edge of the post and 2" (+/- 1/4") from the bottom of the rim board
3. Install third screw centered on both the post and the rim board

CONDITION 4 – EXTERIOR MOUNTED 4X4 POST TO DOUBLE 2X RIM

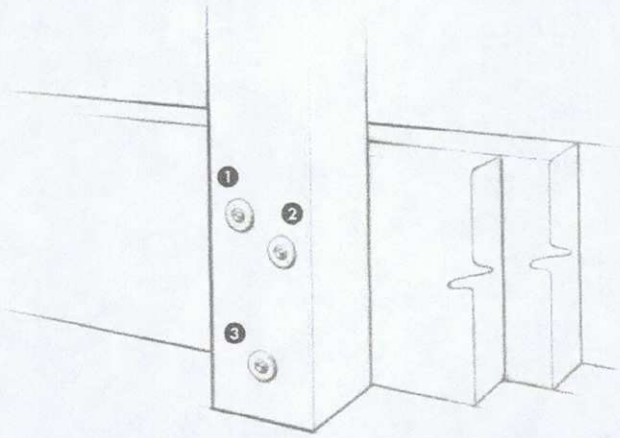

For this condition, use the 8" ThruLOK fastener

1. Install first screw 1" in from the edge of the post and 2" (+/- 1/4") from the top of the rim boards
2. Install second screw 1" in from the other edge of the post and 3" (+/- 1/4") from the top of the rim boards
3. Install third screw in the center of the post and 2" (+/- 1/4") from the bottom of the rim boards

CONDITION 5 – INTERIOR MOUNTED 4X4 POST TO DOUBLE 2X RIM

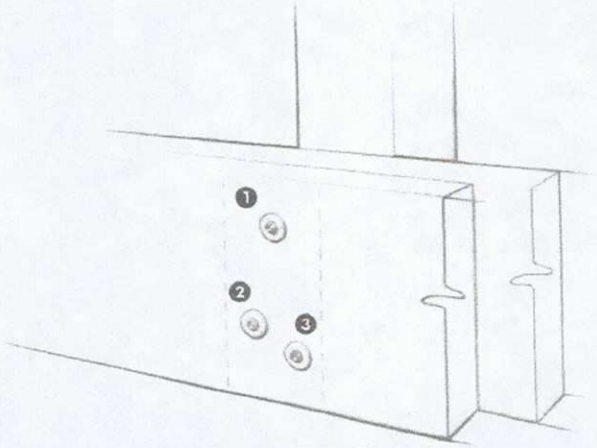

For this condition, use the 8" ThruLOK fastener

1. Install first screw in the center of the post and 2" (+/- 1/4") from the top of the rim boards
2. Install second screw 1" in from the edge of the post and 3" (+/- 1/4") from the bottom of the rim boards
3. Install third screw 1" in from the other edge of the post and 2" (+/- 1/4") from the bottom of the rim boards

CONDITION 6 – INTERIOR MOUNTED 4X4 CORNER POST TO DOUBLE 2X RIM

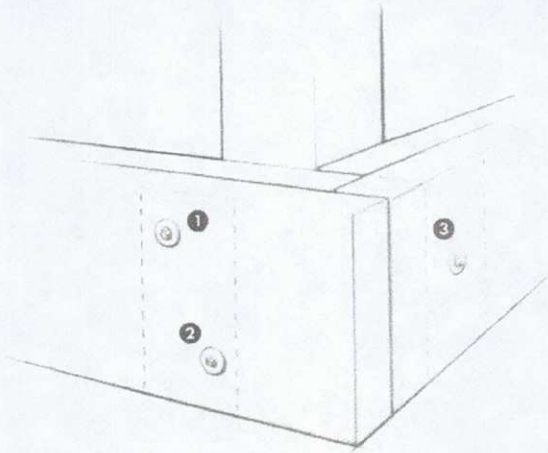

For this condition, use the 8" ThruLOK fastener

1. Install first screw 1" in from the edge of the post and 2" (+/- 1/4") from the top of the rim boards
2. Install second screw 1" in from the other edge of the post and 2" (+/- 1/4") from the bottom of the rim boards
3. Install third screw centered on both the post and the rim boards

CONDITION 7 – INTERIOR MOUNTED 4X4 POST TO 2X RIM WITH BLOCKING

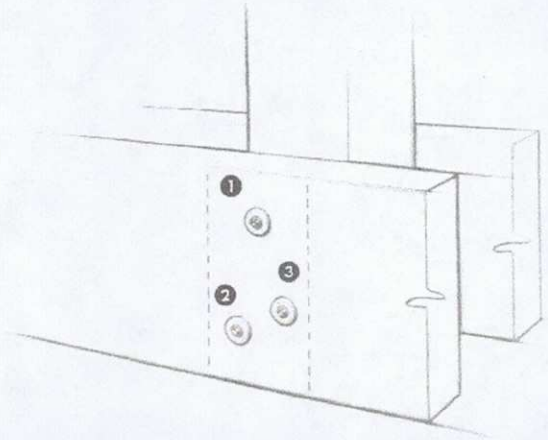

For this condition, use the 8" ThruLOK fastener

1. Install first screw in the center of the post and 2" (+/- 1/4") from the top of the rim board
2. Install second screw 1" in from the edge of the post and 2" (+/- 1/4") from the bottom of the rim board
3. Install third screw 1" in from the other edge of the post and 3" (+/- 1/4") from the bottom of the rim board

CONDITION 8 – INTERIOR MOUNTED 4X4 POST TO 2X RIM WITH SIDE BLOCKING

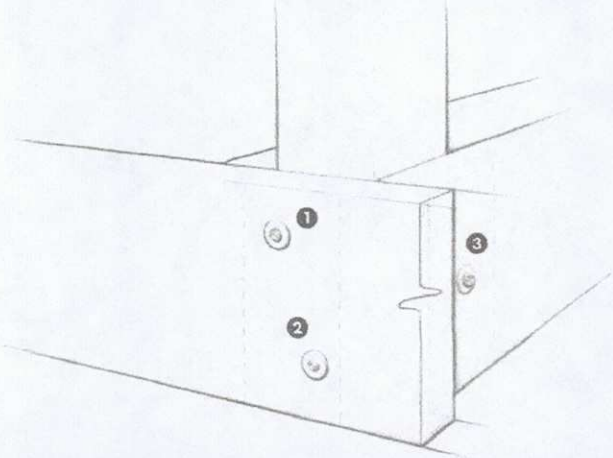

For this condition, use two, 6 1/4" and one, 8" ThruLOK fasteners

1. Install first 6 1/4" screw 1" in from the edge of the post and 2" (+/- 1/4") from the top of the rim board
2. Install second 6 1/4" screw 1" in from the other edge of the post and 2" (+/- 1/4") from the bottom of the rim board
3. Install 8" screw centered on both the post and the rim board

GENERAL FASTENING GUIDELINES

Design values used to create the fastening patterns in this bulletin were derived from individual fastener testing under ICC Acceptance Criteria AC233 and reported in ICC-ES Evaluation Report ESR #1078. Full scale testing of the deck rail post to deck frame connections were also conducted by an accredited third party to support these details.

The connection details shown in this bulletin apply specifically to 4x4 posts and 2x8, 2x10 or 2x12 rims and/or joists.

For different dimension lumber, wood species of lower density than Hem Fir (SYP and DF are higher density and therefore approved), or post heights greater than 37.5" off the top of the joists, please contact FastenMaster to determine the proper fastening solution.

ThruLOK is coated with mechanically applied zinc in accordance with ASTM B695, Class 55. This is compliant with the 2006 International Residential Code® (R319.3) and 2009 IRC (R317.1.3) for use in ACQ pressure treated wood.

As with other bolted connections using wet treated wood, the nut should be inspected and tightened if needed after initial drying period.

The connection details in this bulletin are an acceptable means of transferring the load from guard post to rim joist only. Additional blocking or hardware may be required to transfer loads from the rim to deck joists.

Fastening patterns assume the following: All components are used (screw, washer and nut), holes are not pre-drilled, and posts are loaded in an outward direction from the deck.

For questions regarding these or other connections, please contact FastenMaster Technical Support at www.fastenmaster.com or by calling 800-518-3569.

FMTECH-TRRPOST (0114)

FastenMaster® and ThruLOK® are trademarks of OMG, Inc.
Copyright © 2014 OMG, Inc. All rights reserved.

CARRYING BEAM TO NOTCHED SUPPORT POST

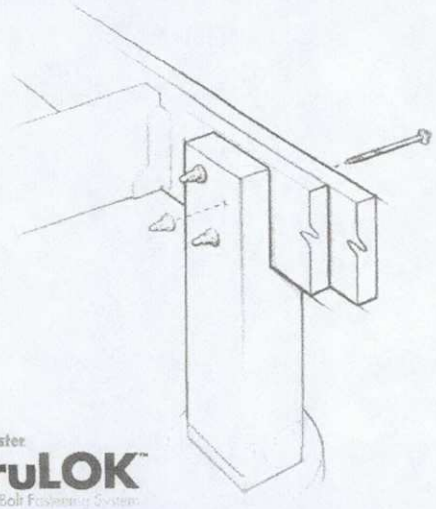

FastenMaster ThruLOK™ Screw Bolt Fastening System

CONNECTION DETAILS

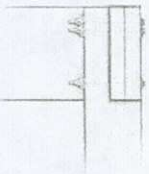

A commonly accepted, code-compliant method of deck construction allows for carrying beams and notched 6x6 support posts to be bolted together. According to the International Residential Code (IRC R502.9), "where posts and beam or girders construction is used to support floor framing, positive connections shall be provided to ensure against uplift and lateral displacement." When installed as shown in this bulletin, the 7" FastenMaster ThruLOK restrains against both of these forces equal to traditionally bolted connections with a faster and easier method of installation.

INSTALLATION INSTRUCTIONS

1. Choose the correct fastening pattern based on one of the three conditions listed on this bulletin.
2. Separate the 7" ThruLOK screw and washer from the nut.
3. Using a 1/2" drill on low speed/high torque setting, install the ThruLOK screw and washer into the outside face of the application until the screw is 1/4" to 1/8" from being flush.
4. Install the ThruLOK nut onto the exposed threaded end of the fastener. Firmly twist on the nut by hand until snug.
5. Return to driving the screw in the remaining 1/4" to 1/8" until the washer and nut are firmly drawn together.
6. Make sure that the point of the ThruLOK fastener has passed the "MIN LINE" printed on the nut. Drive the screw in the remaining 1/4" to 1/8" until the washer and nut are firmly drawn together.
7. Repeat until all of the fasteners are installed correctly according to the specifications contained in this bulletin.

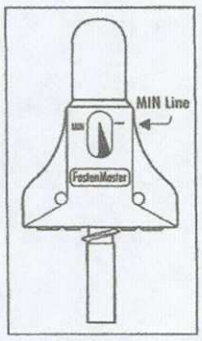

CONDITION 1 – CONTINUOUS BEAM REPLACING 2 BOLTS OF ½" DIAMETER

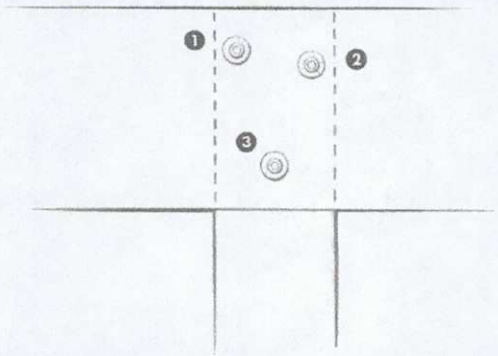

1. Install first screw 1" in from the edge of the post and 2" (+/- 1/4") from the top of the beam
2. Install second screw 1" in from the other edge of the post and 3" (+/- 1/4") from the top of the beam
3. Install third screw in the center of the post and 2" (+/- 1/4") from the bottom of the beam

CONDITION 2 – CONTINUOUS BEAM REPLACING 2 BOLTS OF 5/8" DIAMETER

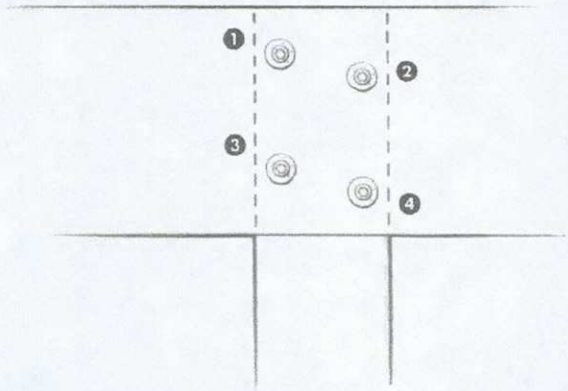

1. Install first screw 1" in from the edge of the post and 2" (+/- 1/4") from the top of the beam
2. Install second screw 1" in from the other edge of the post and 3" (+/- 1/4") from the top of the beam
3. Install third screw 1" in from the edge of the post and 3" (+/- 1/4") from the bottom of the beam
4. Install fourth screw 1" in from the other edge of the post and 2" (+/- 1/4") from the bottom of the beam

CONDITION 3 – SPLICED BEAMS REPLACING ½" OR ⅝" BOLTS ON BUTTED BEAMS

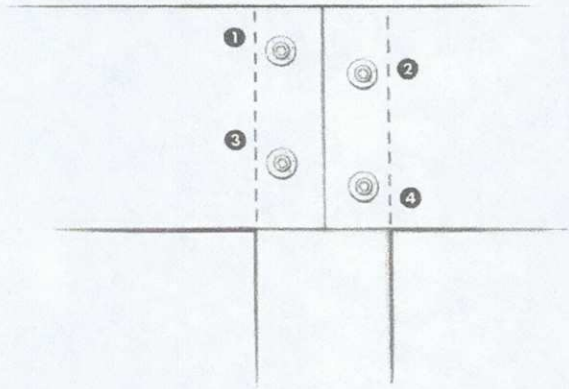

1. Install first screw 1" in from the edge of the post and 2" (+/- 1/4") from the top of the beam
2. Install second screw 1" in from the other edge of the post and 3" (+/- 1/4") from the top of the beam
3. Install third screw 1" in from the edge of the post and 3" (+/- 1/4") from the bottom of the beam
4. Install fourth screw 1" in from the other edge of the post and 2" (+/- 1/4") from the bottom of the beam

GENERAL FASTENING GUIDELINES

Third party testing in accordance with ASTM D1761 and ICC Acceptance Criteria AC233 was conducted to determine the proper placement and number and fasteners to meet code.

ThruLOK is coated with mechanically applied zinc in accordance with ASTM B695, Class 55. This is compliant with the 2006 International Residential Code® (R319.3) and 2009 IRC (R317.1.3) for use in ACQ pressure treated wood.

The connection details shown in this bulletin apply specifically to 6x6 or 6x8 support posts notched 3" (+/- 1/4") to receive double 2x8, 2x10 or 2x12 beams.

Beams and column dimensions should always be checked against local code requirements and designed to support the appropriate deck loads.

As with other bolted connections using wet treated wood, the nut should be inspected and tightened if needed after initial drying period.

Under the following conditions, please consult a design professional:

1. When using wood species with densities lower than Hem Fir. (The wood densities of Southern Pine, Douglas-Fir and Douglas-Fir/Larch are higher than Hem Fir, and therefore acceptable.)
2. Where the combined live and dead loads or wind uplift design values exceed 100 psf.

For questions regarding these or other connections, please contact FastenMaster Technical Support at www.fastenmaster.com or by calling 800-518-3569.

FMTECH-THRCARRY (0114)

FastenMaster® and ThruLOK® are trademarks of OMG, Inc. Patent Pending.
Copyright © 2014 OMG, Inc. All rights reserved.

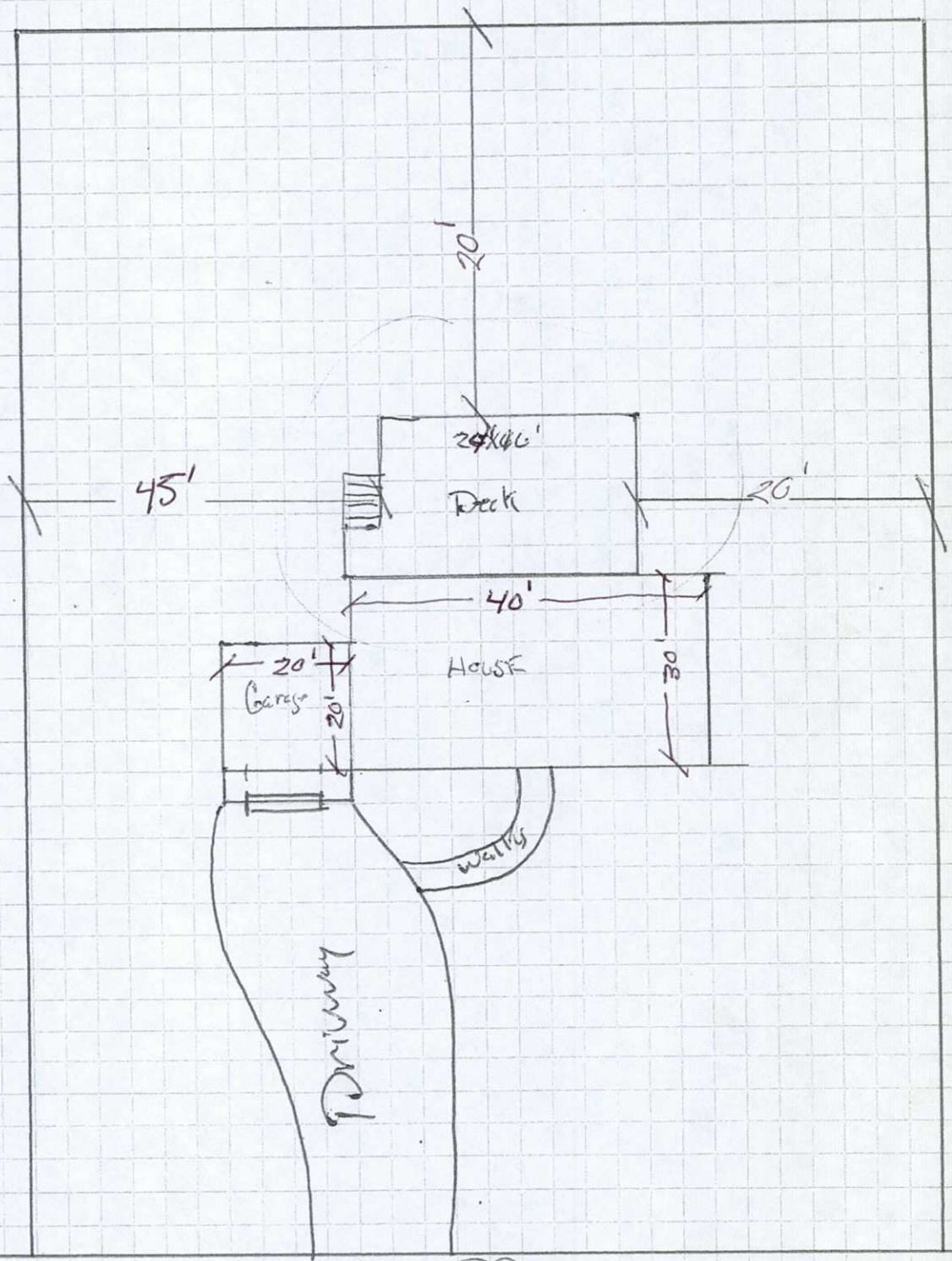

RECEIVED
JUN 20 2014
CALN TWP.

Caln Township
Caln Twp. Municipal Authority
253 Municipal Drive
Thorndale,PA 19372

INVOICE #
14-00332

INVOICE DATE: 06/20/14
DUE DATE: 07/20/14

ACCOUNT ID: SMUCKER1

SMUCKER BROTHERS CONSTRUCTION
1330 SHEEP HILL RD
EAST EARL, PA 17519

PERMIT INFORMATION
PERMIT NO: 14-00403
LOCATION: 3429 ALYDAR RD

QUANTITY/UNIT	SERVICE ID	DESCRIPTION	UNIT PRICE	AMOUNT
		Permit No: 14-00403		
1.0000	RC-DECK	DECK MINIMUM	100.00000	100.00
		Permit No: 14-00403		
184.0000/SQF	RC-SFDEC	DECK ADDITIONAL SQUARE FEET	0.50000	92.00
		Permit No: 14-00403		
			TOTAL DUE:	$ 192.00
		Prn Payment: 06/25/14 CK		-100.00
			BALANCE:	$ 92.00

RECEIVED
JUL 24 2014
CALN TWP

PAYMENT COUPON - PLEASE DETACH AND RETURN THIS PORTION ALONG WITH YOUR PAYMENT

Caln Township
Caln Twp. Municipal Authority
253 Municipal Drive
Thorndale,PA 19372

INVOICE #: 14-00332
DESCRIPTION: Permit No: 14-00403
ACCOUNT ID: SMUCKER1
DUE DATE: 07/20/14
TOTAL DUE: $ 92.00

SMUCKER BROTHERS CONSTRUCTION
1330 SHEEP HILL RD
EAST EARL, PA 17519

TOWNSHIP OF CALN
253 MUNICIPAL DR
THORNDALE, PA. 19372
610-384-0600

CERTIFICATE OF OCCUPANCY

Building Permit No.: 15-00120

Zoning District: R-3

Permission is hereby given:

WIECZOREK MATTHEW J MULLANEY MEGH/
(owner of use)

3389 ALYDAR RD, DOWNINGTOWN, PA
owner (new)

SMUCKER BROTHERS CONSTRUCTION
contractor

Use Type: R RESIDENTIAL

(Lot & Development)

REMARKS

SCANNED
AUG 17 2015
ELECTRONICALLY FILED

At: 3389 ALYDAR RD

Description: DECK j(400 SQ. FT.)

Andrew F. Reczek
Building Inspector DATE 6/2/15

Andrew F. Reczek
Zoning Officer/Building Code Official DATE 6/2/15

IN ACCORDANCE WITH 2009 IRC

APPROVED AS TO COMPLIANCE
WITH ZONING ORDINANCE.

CALN TOWNSHIP

DEPARTMENT OF CODE ENFORCEMENT

Andrew F. Reczek, Director of Code Enforcement
Stephen L. Miller, Code Official / Fire Marshal
Raymond Stackhouse, Code Official / Deputy Fire Marshal
Joseph Arvay, Property Maintenance / Housing Inspector

www.calntownship.org

Phone: 610-384-0600 Ext. 145 Fax: 610-384-0689
Email: smiller@calntownship.org
253 Municipal Drive, P.O. Box 72149 Thorndale, Pa. 19372-0149

MISCELLANEOUS INSPECTION REPORT

DATE: 6-2-15

LOCATION: 3389 A. Lydar Rd

TYPE OF INSPECTION: Final Deck

Final Inspection of this deck found:

→ guard posts in place and secure. Openings 3.5"

→ Lateral ties down observed through the drywall in the interior of the basement

→ Lateral bracing not installed as an alternate engineer approved plans have been submitted

OK to issue final U+O Permit

TA

CALN TOWNSHIP
DEPARTMENT OF CODE ENFORCEMENT
Andrew F. Reczek, Director of Code Enforcement
Stephen L. Miller, Code Official / Fire Marshal
Raymond Stackhouse, Code Official / Deputy Fire Marshal
Joseph Arvay, Code Official / Housing Inspector
610.384.0600 fax: 610.384.0689 Email: areczek@calntownship.org
253 Municipal Drive, P.O. Box 72149 Thorndale, Pa 19372-0149
www.calntownship.org

FIELD CORRECTION NOTICE

PROJECT ADDRESS 3389 Alydar Rd **LOT #**

INSPECTION DATE 4/14/15

PERMIT #

OWNER, AGENT, CONTRACTOR EMAIL; John-- Mikes--smuckerbros@gmail.com

THE FOLLOWING ITEMS WERE FOUND IN VIOLATION OF THE CALN TOWNSHIP BUILDING OR PROPERTY MAINTENANCE CODE. ALL IDENTIFIED VIOLATIONS MUST BE CORRECTED BY THE OWNER, CONTRACTOR, OR AGENT. THE RESPONSIBLE INDIVIDUAL SHALL BE REQUIRED TO SCHEDULE A REINSPECTION PRIOR TO THE TIMEFRAME ESTABLISHED BELOW, ANY FURTHER CONSTRUCTION ACTIVITY OR USE AND OCCUPANCY APPROVAL;

PROVIDE TEXT BOX

Miscellaneous report

Rough framing – deck

2x10 floor joists 16" OC 14' span

(2) 2x10 header

1/2" lag bolts used to connect to ledger board

6x6 post said to be mechanically fasten to footers documentation of type of connector needs to be provided

Guard posts not yet in place OK 6-2-15

Lateral bracing not in place-needs to provide a engineering detail from a design professional indicating its not required OK 6-2-15

Laterial ties downs needed to be installed drywall needs to remain open so tension devices can be inspected at final OK 6-2-15

Verbally addressed with John at site

REINSPECTION REQUIRED NO LATER THAN: Final

INSPECTOR: Jason Ostrum

Note; Inspections shall be scheduled allowing a minimum of 24-hour advanced Notice. Inspection shall be scheduled by calling 610-384-0600 Ext. 119 or 120 between the hours of 8:00 AM and 4:30 PM Monday – Friday.

CALN TOWNSHIP
DEPARTMENT OF CODE ENFORCEMENT
Andrew F. Reczek, Director of Code Enforcement
Stephen L. Miller, Code Official / Fire Marshal
Raymond Stackhouse, Code Official / Deputy Fire Marshal
Joseph Arvay, Code Official / Housing Inspector
610.384.0600 fax: 610.384.0689 Email: areczek@calntownship.org
253 Municipal Drive, P.O. Box 72149 Thorndale, Pa 19372-0149
www.calntownship.org

FIELD CORRECTION NOTICE

PROJECT ADDRESS 3389 Alydar Rd **LOT #**

INSPECTION DATE 4/9/15

PERMIT #

OWNER, AGENT, CONTRACTOR EMAIL;

THE FOLLOWING ITEMS WERE FOUND IN VIOLATION OF THE CALN TOWNSHIP BUILDING OR PROPERTY MAINTENANCE CODE. ALL IDENTIFIED VIOLATIONS MUST BE CORRECTED BY THE OWNER, CONTRACTOR, OR AGENT. THE RESPONSIBLE INDIVIDUAL SHALL BE REQUIRED TO SCHEDULE A REINSPECTION PRIOR TO THE TIMEFRAME ESTABLISHED BELOW, ANY FURTHER CONSTRUCTION ACTIVITY OR USE AND OCCUPANCY APPROVAL;

PROVIDE TEXT BOX

Miscellaneous Report

Footer-Deck

(4) footers
36" in depth
7' of span maintained
16" in diameter or larger

REINSPECTION REQUIRED NO LATER THAN: Rough Frame

INSPECTOR: Jason Ostrum

Note; Inspections shall be scheduled allowing a minimum of 24-hour advanced Notice. Inspection shall be scheduled by calling 610-384-0600 Ext. 119 or 120 between the hours of 8:00 AM and 4:30 PM Monday – Friday.

TOWNSHIP OF CALN

PERMIT

Permit No: 15-00120

Date Issued: 02/26/15

Location of Work: 3389 ALYDAR RD

Type of Work: ACCESSORY DECK 400 SQ. FT.

INSPECTIONS REQUIRED:

1. SITE - 3/31/2015 22' Rear yard side yard distance greater than 10' OK AFR
2. FOOTINGS (PRIOR TO POUR)
3. ROUGH FRAMING
4. FINAL

610.384.0600 EXT 220 24 HRS NOTICE

Owner: WIECZOREK MATTHEW J MULLANEY MEGHAN

Contractor: SMUCKER BROTHERS CONSTRUCTION

Parcel #: 39-4-747.0

Andrew F. Reczek

BUILDING CODE OFFICIAL

THIS PLACARD MUST BE POSTED IN A CONSPICUOUS PLACE ON THE PREMISES, EASILY VISIBLE FROM THE PRINCIPAL STREET, WELL SECURED IF EXPOSED TO THE WEATHER, DURING THE ENTIRE CONSTRUCTION TIME.

WORK MUST BE STARTEDWITHIN 6 MONTHS FROM DATE OF ISSUE

CALN TWP
FEB 23 2015
RECEIVED

CALN TOWNSHIP
253 Municipal Drive, Thorndale, PA 19372
610/384-0600, Fax – 610/384-0689
BUILDING PERMIT APPLICATION – PERMIT FEES ARE NON-REFUNDABLE
Minimum fee due at time of permit application

Address 3389 Alydar RD **Subdivision** _____ **Lot #** _____ **Zoning Dist.** R-3

Building Improvement
- New Building ☐
- Addition ☐
- Alteration ☐
- Basement ☐
- Deck /Ramp ☑
- Demolition ☐
- Driveway ☐
- Fire Protection
- Sprinkler/Alarm ☐
- Hot Tub ☐
- Tenant fit-out ☐
- Mechanical ☐
- Plumbing ☐
- Pool ☐
- Roof ☐
- Shed (>1000 sq. ft.) ☐
- Tank ☐
- Other ☐

IDENTIFICATION – To be completed by all applicants

OWNER
Name: Matthew Wieczorek
Address: 3389 Alydar RD
Downingtown PA
Phone #: [redacted]

Home Improvement Contractor # PA083776
Expiration Date: 08
Name: Smucker Brothers Construction
Address: 1330 Sheep Hill RD
East Earl PA 17519
Phone #: 717-587-8818

Residential ☑ Location: _____
Commercial ☐ Location: _____

DATE: 02/18/2015
Job Cost: 12,500

Sewage Disposal
Public ☑ Private ☐

Water Supply
Public ☑ Private ☐

Type of Construction
IA ☐ IB ☐
IIA ☐ IIB ☐
IIIA ☐ IIIB ☐
IV ☐
VA ☐ VB ☐

Site located in Flood Area
Yes ☐ No ☐

Submit floor plan showing Location w/clearances & material types /Mechanical
Central AC?
Yes ☐ No ☐
Will there be an Elevator?
Yes ☐ No ☐

Type of Heating Fuel
- Gas ☐
- Oil ☐
- Electric ☐
- Coal ☐
- Other ☐

Residential Building Area:
# of Stories 1
Basement _____
Garage _____
1st. Floor _____
2nd. Floor _____
Total Habitable Space Deck 400 sq. ft

Commercial Projects:
Use Group Classification _____
Occupancy Load _____
Sprinklered ☐ Yes ☐ No

Residential Bldg. Only
Bedrooms _____
Bathrooms _____

Residential Bldg. Only
Bedrooms _____
Bathrooms _____

Lot Area _____ sq.ft.
Building Coverage _____ sq.ft.
Total Impervious Coverage _____ sq.ft.

 # Off Street Parking Spaces _____

SIGNATURE OF APPLICANT: [signature] **DATE:** 02/18/2015

DESCRIPTION /COMMERCIAL ACTIVITIES Deck / Single Family Cluster Dev. / Accessory Structure

Under the provisions of Ordinance No. 2013-03, you may be entitled to a property tax exemption on your contemplated alteration or new construction. An application for exemption may be secured from the Code Enforcement office & must be filed with the Township at the time a building permit is secured.

DO NOT WRITE IN THIS SPACE – FOR OFFICE USE ONLY

Permit # 15-00120 | Approved By: [signature] | Permit Fee: 200.00 | Date Issued: 2/26/2015

REMARKS: See attached Review

P:\Permit Applications\Permit Applications\Building Permit application .docx - Lerta.docx

Bambi Warren

From: Delivery@pa1call.net
Sent: Thursday, April 02, 2015 1:35 PM
To: paonecall
Subject: FQ1 00005 POCS 04/02/15 13:34:35 20150921928-000 NEW XCAV RTN

FQ1 00005 POCS 04/02/15 13:34:35 20150921928-000 NEW XCAV RTN

==========PENNSYLVANIA UNDERGROUND UTILITY LINE PROTECTION REQUEST========== Serial Number--[20150921928]-[000] Channel#--[1328026][0332] Message Type--[NEW][EXCAVATION][ROUTINE]

County--[CHESTER] Municipality--[CALN TWP]
Work Site--[3389 ALYDAR RD]
Nearest Intersection--[EMBREEVILLE RD]
Second Intersection--[SR 30]
Subdivision--[] Site Marked in White--[N]
Location Information--
[DOWNINGTON PA.
SECOND INTERSECTION ABOVE IS A NEARBY ROAD
PRIVATE PROPERTY LOCATION:IN REAR]
Caller Lat/Lon--[]
Mapped Type--[P] Mapped Lat/Lon--
[39.990294/-75.757050,39.990528/-75.757278,39.990305/-75.757540,
39.990108/-75.757237]
Map Graphic--[http://www.pa1call.org/ViewMap/view.aspx?sn=20150921928]
Type of Work--[FOOTERS FOR DECK] Depth--[36IN]
Extent of Excavation--[15IN DIA] Method of Excavation--[AUGERING]
Street--[ ] Sidewalk--[ ] Pub Prop--[ ] Pvt Prop--[X] Other--[]

Lawful Start Dates--[07-Apr-15] thru [16-Apr-15] Response Due Date--[06-Apr-15]
Scheduled Excavation Date--[07-Apr-15] Dig Time--[0800] Duration--[6 HOURS]

Caller--[MICHAEL SMUCKER]
Caller Phone--[717-587-8818] Caller Ext--[]
Excavator--[SMUCKER BROTHERS CONSTRUCTION]
Address--[1330 SHEEP HILL RD]
City--[EAST EARL] State--[PA] Zip--[17519]
FAX--[] Caller Type--[B]
Email--[smuckerbros@gmail.com]
Work For--[SMUCKER BROTHERS CONSTRUCTION]

Person to Contact--[MICHAEL SMUCKER]
Contact Phone--[717-587-8818] Contact Ext--[]
Best Time to Call--[ANYTIME]

Prepared--[02-Apr-15] at [1334] by [COLLEEN TRAINER]
Remarks--
[]

FQ10 FQ1=CALN T JZ 0 JZ =COMCAST CABLE KF 0 KF =PECO CTVL
VA 0 VA =PA AMERICAN WTR VAW0 VAW=PAWC COATESVILL YJ 0 YJ =VERIZON EASTERN

Serial Number--[20150921928]-[000]
========== Copyright (c) 2015 by Pennsylvania One Call System, Inc. ==========

CALN TOWNSHIP
DEPARTMENT OF CODE ENFORCEMENT
Andrew F. Reczek, Director of Code Enforcement
Stephen L. Miller, Code Official / Fire Marshal
Raymond Stackhouse, Code Official / Deputy Fire Marshal
Joseph Arvay, Code Official / Housing Inspector
610.384.0600 fax: 610.384.0689 Email: areczek@calntownship.org
253 Municipal Drive, P.O. Box 72149 Thorndale, Pa 19372-0149
www.calntownship.org

February 26, 2015

Matthew Wieczorek
3389 Alydar Rd
Downingtown, PA 19335

Downingtown, PA 19335

PERMIT REVIEW: Building Permit / Accessory Deck (400 sq.ft)

1. All work shall comply with the 2009 International Residential Code and the Caln Township Zoning Code.
2. **Deck structure shall maintain the minimum 20' rear yard and 10' side yard setback in accordance with the Section 155-56 D and 155-116 A (5).**
3. All new deck footings shall be placed on firm and stable soils at a minimum depth of 36" below grade. **Mechanical attachment** shall be provided at the connection between post and footing to prevent uplift.
4. (2) 2" x10" beam is permitted to span a **maximum 7'0"** in accordance with Table R502.5 (2). Mechanical attachment shall be provided at each supporting post.
5. 2" x 10" floor joists, SPF #2, 16" on center shall be limited to 15'5"; Joist cantilevers shall not exceed 2'. Adequate bearing shall be provided for all joist members. Joist hangers shall be provided as required for bearing
6. **Ledger shall be connected to the primary structure's 2" nominal band board or 1" x 9 ½" Douglas Fir Laminated veneer lumber using ½" lag screws or bolts spaced a minimum of 15" on center, staggered. Lag screws / bolts shall not be placed within 2" of the top or bottom of the ledger board. Tip shall fully extend through the inside face of the band joist (INSPECTION REQUIRED)**
7. **(2) 1,500 lb. Hold Down Tension devices shall be installed in accordance with Figure R 502.2.2.3**
8. **Lateral bracing shall be provided to limit deck movement.**
9. Composite decking shall be installed in accordance with the manufacture's specification.
10. Flashing shall be provided at the connection between ledger board and the main structure.
11. **Guard railings are required on all raised surfaces (decks, ramps or patios) 30" or greater above grade and on all open sides of stairways with 4 or more risers. Guard Railings shall be a minimum 36" in height and be capable of preventing the passage of a 4" sphere. Guards shall support a 200 lb. lateral load at any point along the top rail in accordance with the American Wood Council detail attached**
12. Contractors shall be properly registered with the Commonwealth of Pennsylvania Attorney General's office
13. **Inspections shall be scheduled allowing a minimum of 24-hr notice by calling 610-384-0600. Required inspections include; 1) Site, 2) Footings prior to pour, 3) Rough Framing, 4) Final**

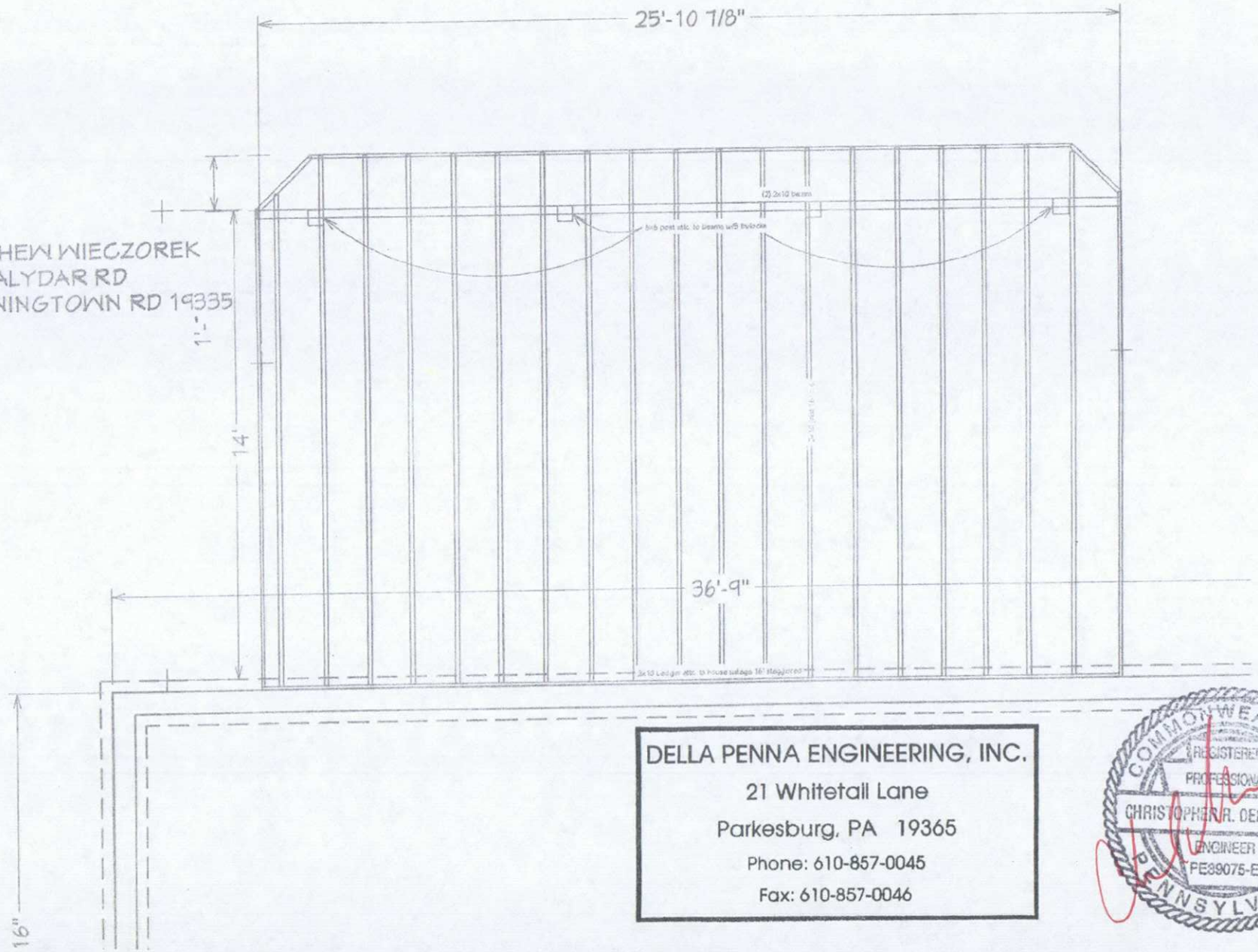

MATTHEW WIECZOREK
3389 ALYDAR RD
DOWNINGTOWN RD 19335

DELLA PENNA ENGINEERING, INC.
21 Whitetail Lane
Parkesburg, PA 19365
Phone: 610-857-0045
Fax: 610-857-0046

COMMONWEALTH OF PENNSYLVANIA
REGISTERED PROFESSIONAL
CHRISTOPHER R. DELLA PENNA
ENGINEER
PE89075-E

COMMONWEALTH OF PENNSYLVANIA
REGISTERED PROFESSIONAL
CHRISTOPHER R. DELLA PENNA
ENGINEER
PE39075-E

MATTHEW WIECZOREK
3389 ALYDAR RD
DOWNINGTOWN PA 19335

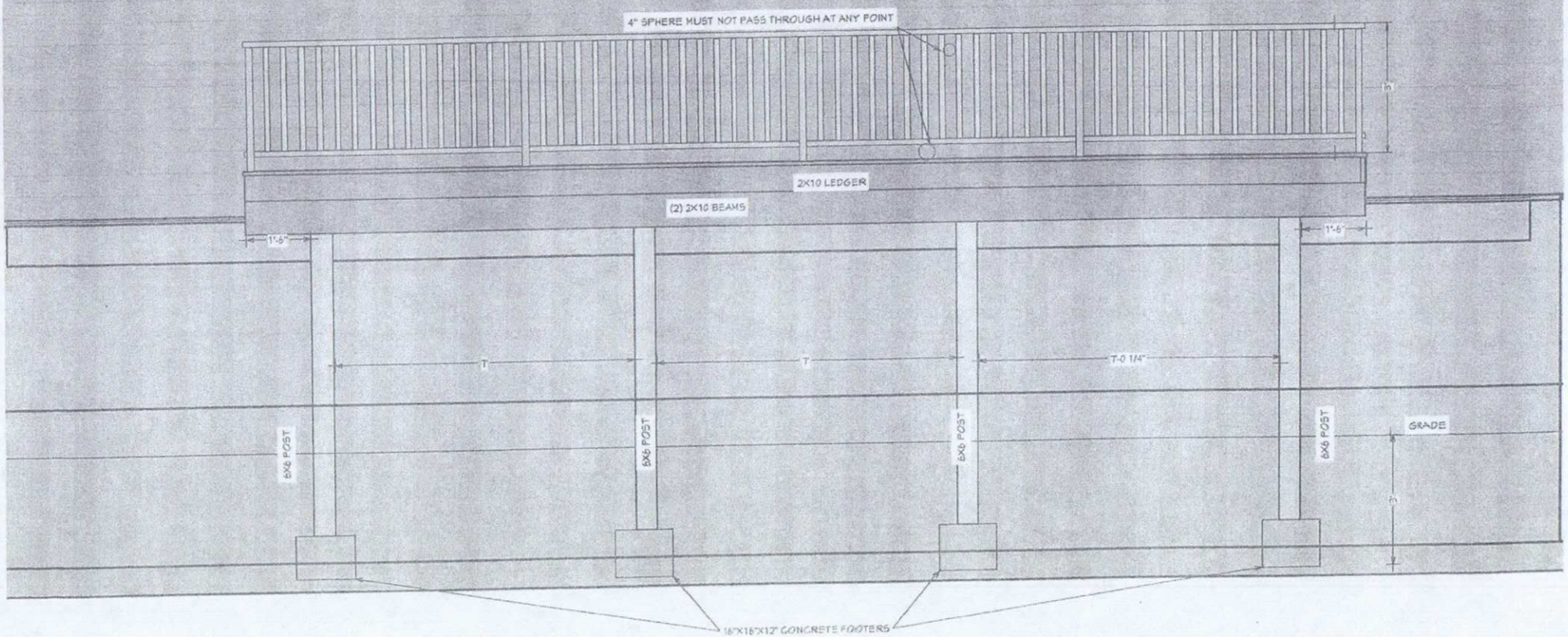

MATTHEW WIECZOREK
3389 ALYDAR RD
DOWNINGTOWN PA 19335

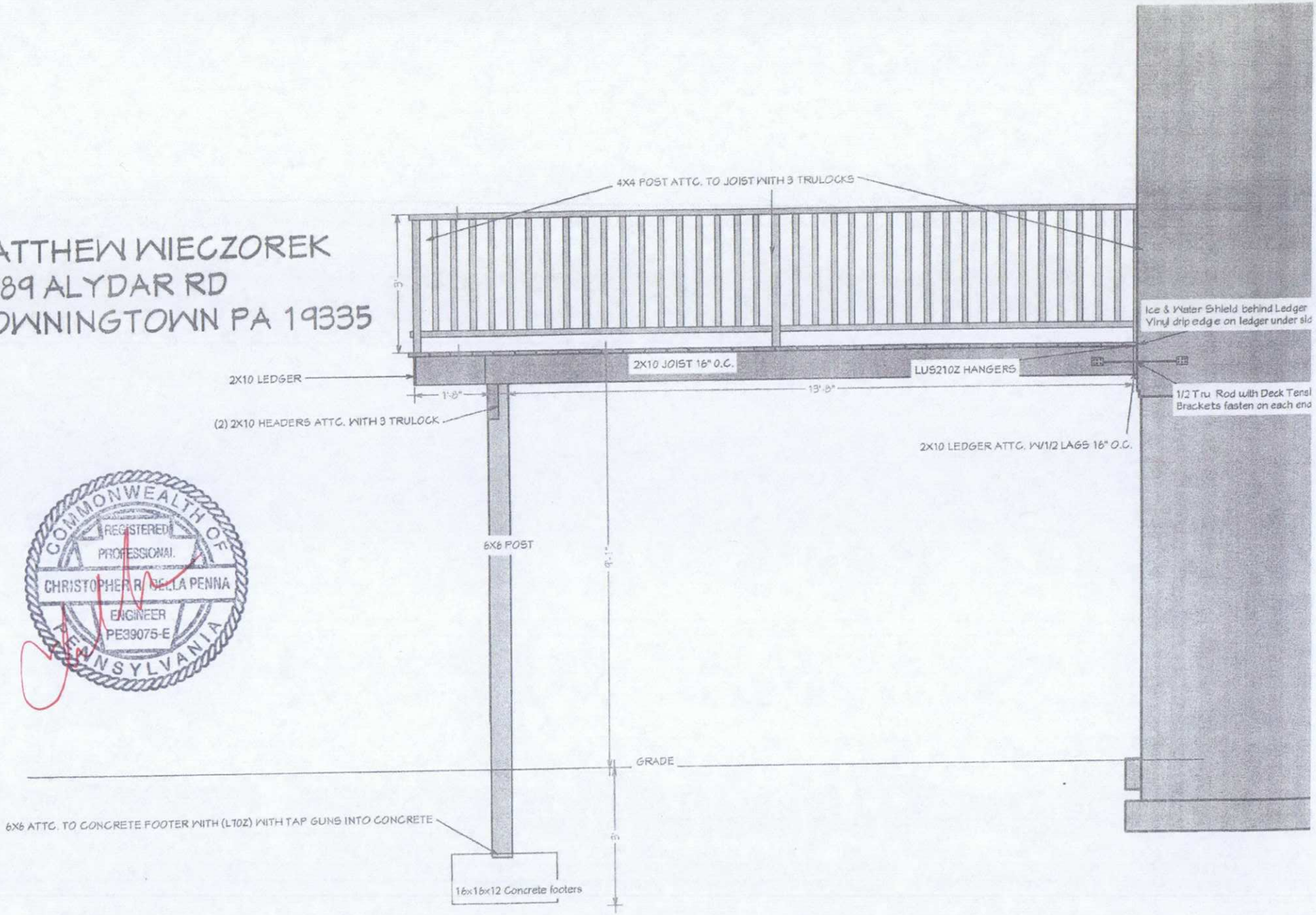

COMMONWEALTH OF PENNSYLVANIA
REGISTERED PROFESSIONAL
CHRISTOPHER R. DELLA PENNA
ENGINEER
PE39075-E

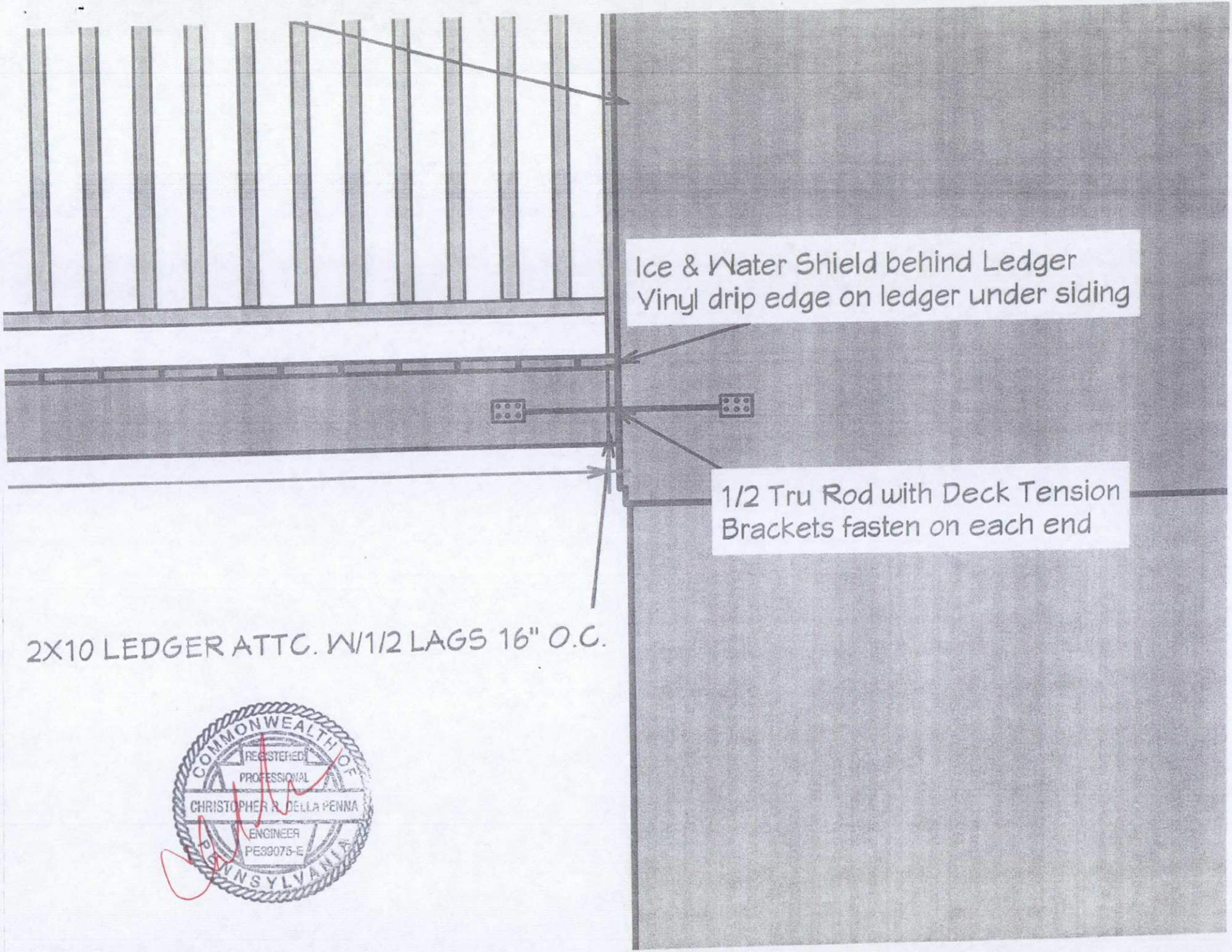

COMMONWEALTH OF PENNSYLVANIA
REGISTERED PROFESSIONAL
CHRISTOPHER R. DELLA PENNA
ENGINEER
PE39075-E

CARRYING BEAM TO NOTCHED SUPPORT POST

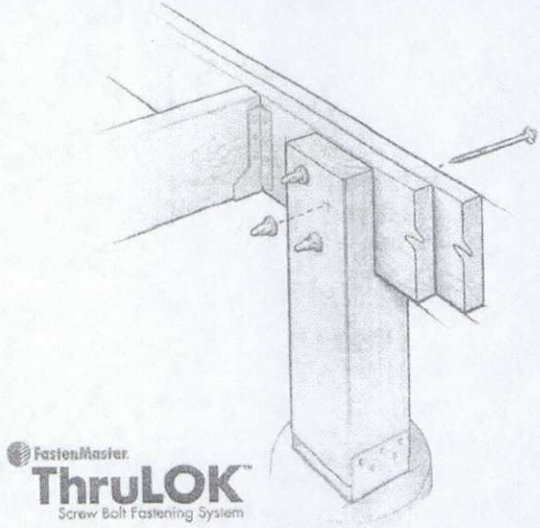

CONNECTION DETAILS

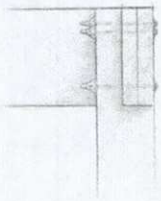

A commonly accepted, code-compliant method of deck construction allows for carrying beams and notched 6x6 support posts to be bolted together. According to the International Residential Code (IRC R502.9), "where posts and beam or girders construction is used to support floor framing, positive connections shall be provided to ensure against uplift and lateral displacement." When installed as shown in this bulletin, the 7" FastenMaster ThruLOK restrains against both of these forces equal to traditionally bolted connections with a faster and easier method of installation.

INSTALLATION INSTRUCTIONS

1. Choose the correct fastening pattern based on one of the three conditions listed on this bulletin.
2. Separate the 7" ThruLOK screw and washer from the nut.
3. Using a ½" drill on low speed/high torque setting, install the ThruLOK screw and washer into the outside face of the application until the screw is ¼" to ⅛" from being flush.
4. Install the ThruLOK nut onto the exposed threaded end of the fastener. Firmly twist on the nut by hand until snug.
5. Return to driving the screw in the remaining ¼" to ⅛" until the washer and nut are firmly drawn together.
6. Make sure that the point of the ThruLOK fastener has passed the "MIN LINE" printed on the nut. Drive the screw in the remaining ¼" to ⅛" until the washer and nut are firmly drawn together.
7. Repeat until all of the fasteners are installed correctly according to the specifications contained in this bulletin.

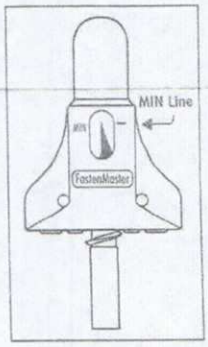

CONDITION 1 – CONTINUOUS BEAM REPLACING 2 BOLTS OF ½" DIAMETER

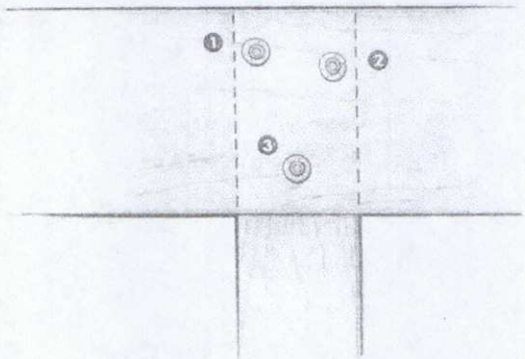

1. Install first screw 1" in from the edge of the post and 2" (+/- ¼") from the top of the beam
2. Install second screw 1" in from the other edge of the post and 3" (+/- ¼") from the top of the beam
3. Install third screw in the center of the post and 2" (+/- ¼") from the bottom of the beam

DECK RAIL POST TO RIM BOARD

CONNECTION DETAILS

According to the 2009 *International Residential Code for One and Two-Family Dwellings,* Table R301.5 (ICC, 2009), guardrails and handrails must be designed to withstand a single concentrated load of 200 pounds in any direction. A critical part of this connection is making a strong connection between the guardrail post and the rim board of the deck. In most cases, a ½" through-bolt or carriage bolt is used to make this connection. When installed as instructed in this bulletin, the ThruLok System can replace ½" bolts, meeting the 200 pound design load for this part of the connection.

APPLICATIONS

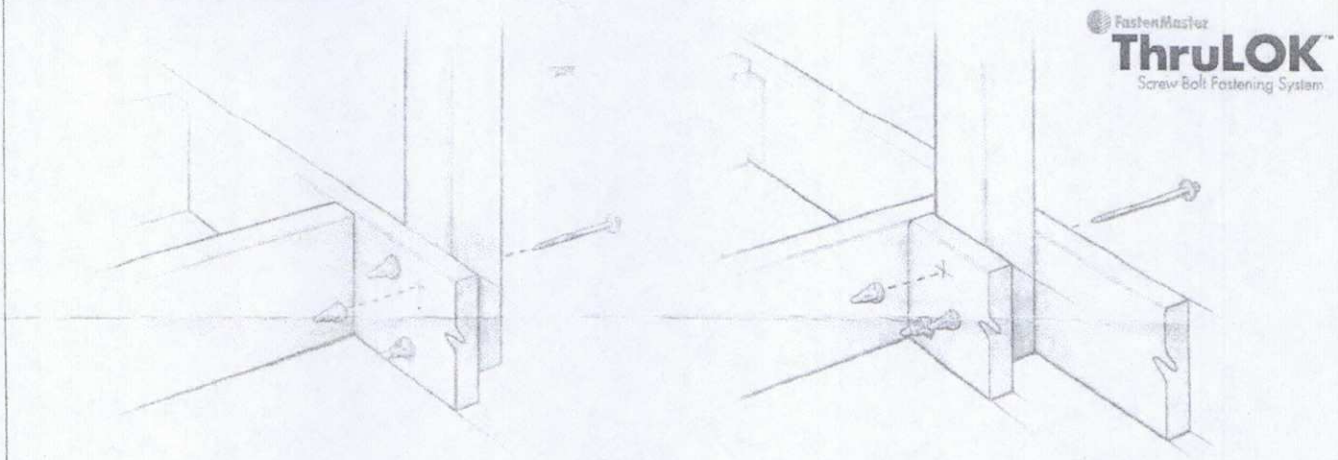

DECK POST TO SINGLE RIM JOIST

DECK POST TO DOUBLE RIM OR SINGLE RIM WITH BLOCKING

INSTALLATION INSTRUCTIONS

1. Choose the correct length (6¼" or 8") and fastening pattern for each post to rim application based on the illustrated conditions.
2. Mark the surface of the wood with the correct pattern.
3. If a flush mounted head is required, use a 1¼" spade bit to create a ¼" deep recess in the rim or post.
4. Remove the pre-assembled ThruLok nut from the screw and using a ½" drill on low speed/high torque setting, install the ThruLok screw and washer into the outside face of the application until the screw is ¼" to ⅛" from being flush.
5. Thread the ThruLok nut onto the exposed threaded end of the fastener. Firmly twist on the nut by hand until snug.
6. Return to driving the screw in the remaining ¼" to ⅛" until the washer and nut are firmly drawn together.
7. Make sure that the point of the ThruLok fastener has passed the "MIN LINE" printed on the nut.
8. Repeat until all of the fasteners are installed correctly according to the specifications contained in this bulletin.

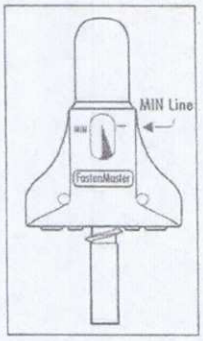

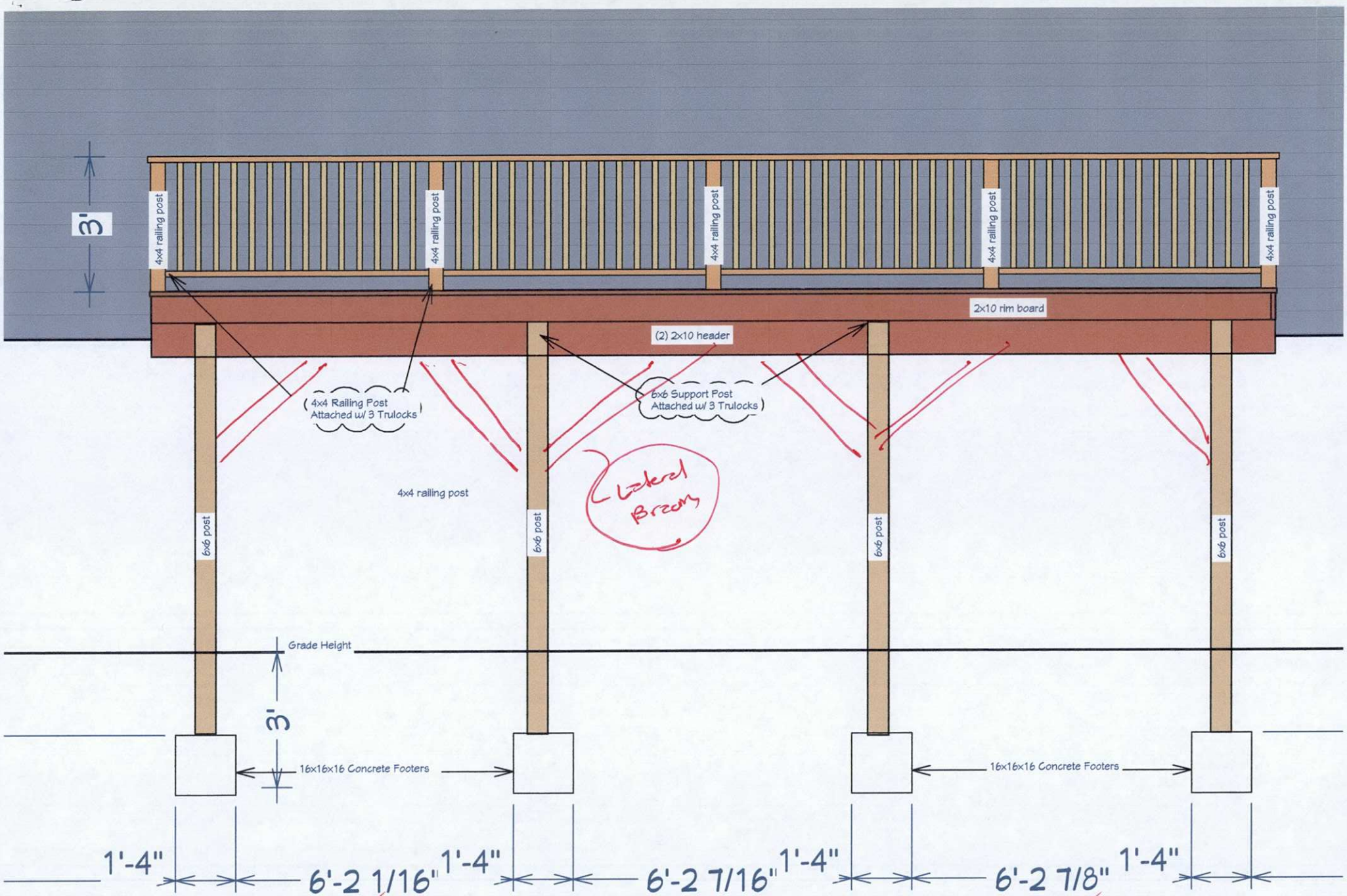

RECEIVED
FEB 23 2015
CALN TWP

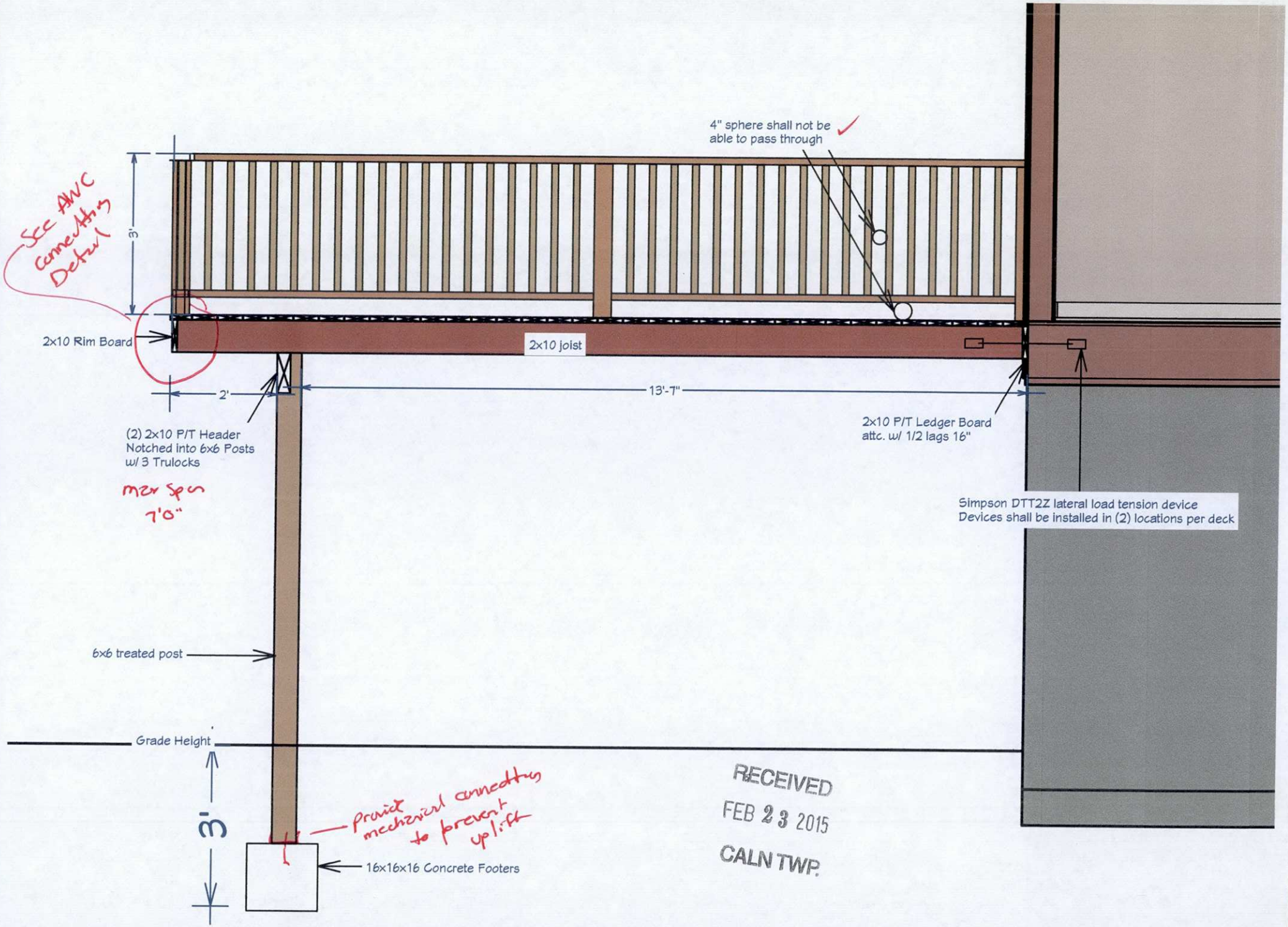

RECEIVED
FEB 23 2015
CALN TWP.

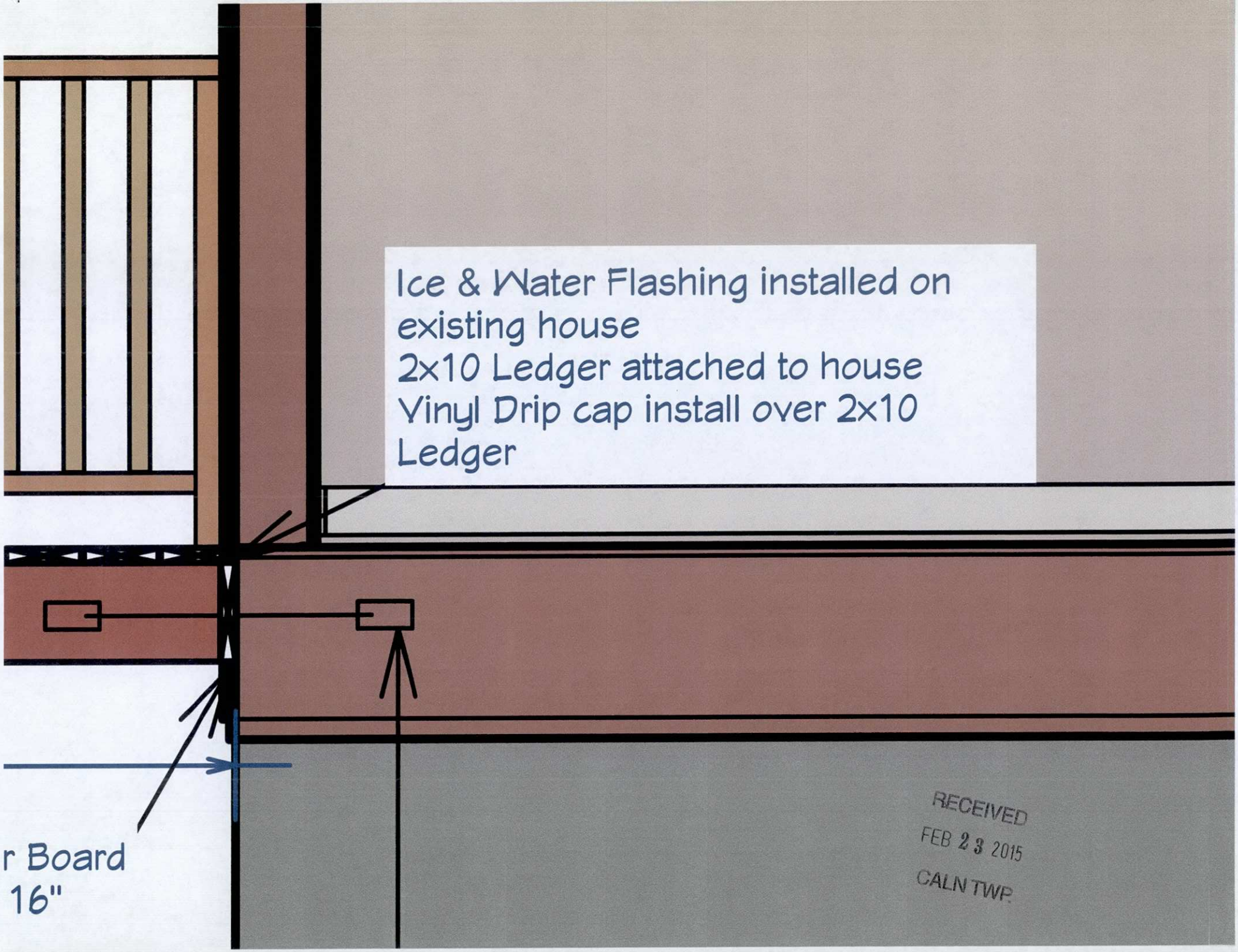

RECEIVED
FEB 23 2015
CALN TWP.

Township Copy

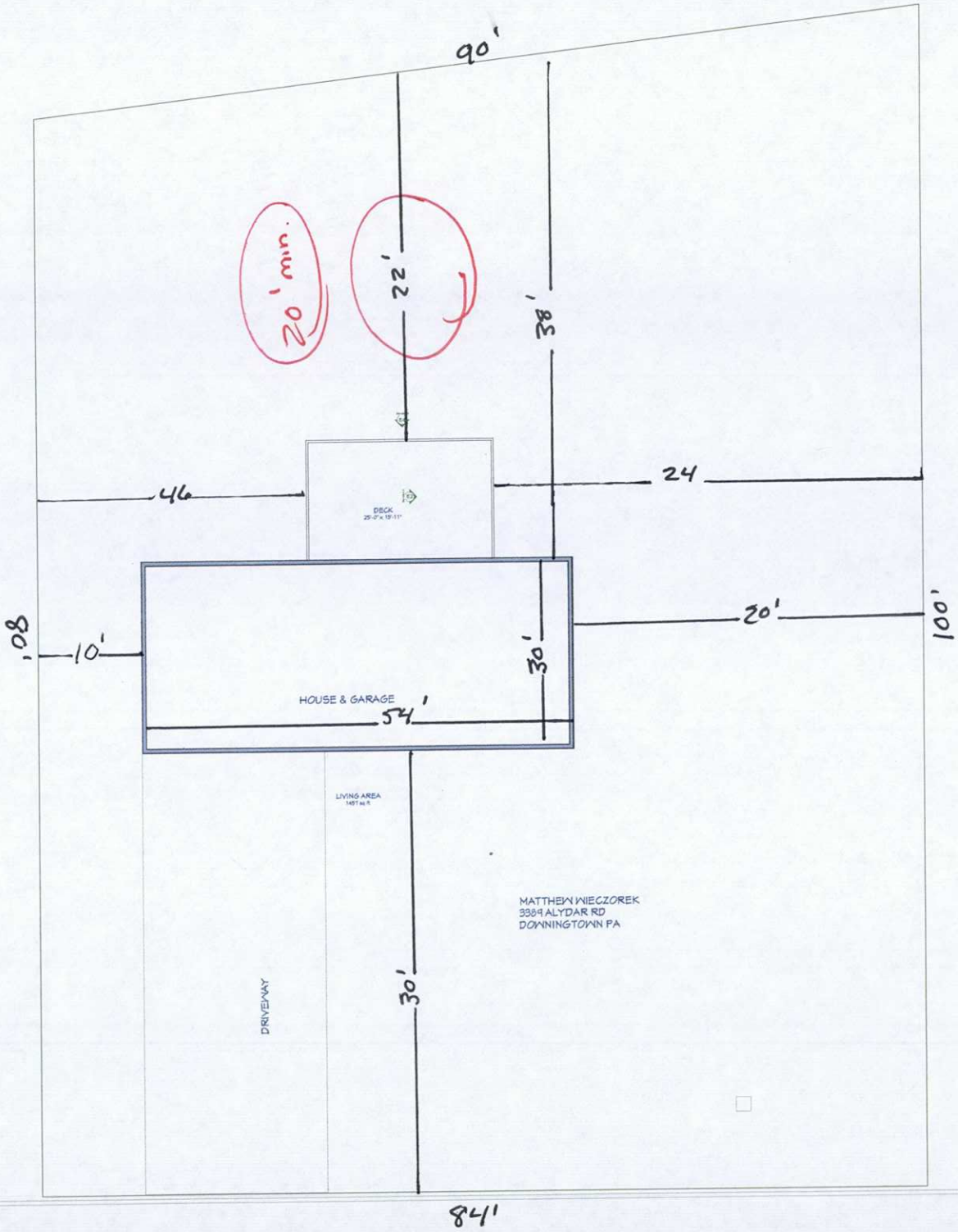

RECEIVED
FEB 2 2015
CALNTWP

Permit Fee = 16 x 25 = 400 sq ft
x .50
$ 200.00

MATTHEW WIECZOREK
3389 ALYDAR RD
DOWNINGTOWN PA

RECEIVED
FEB 23 2015
CALN TWP.

Township Copy

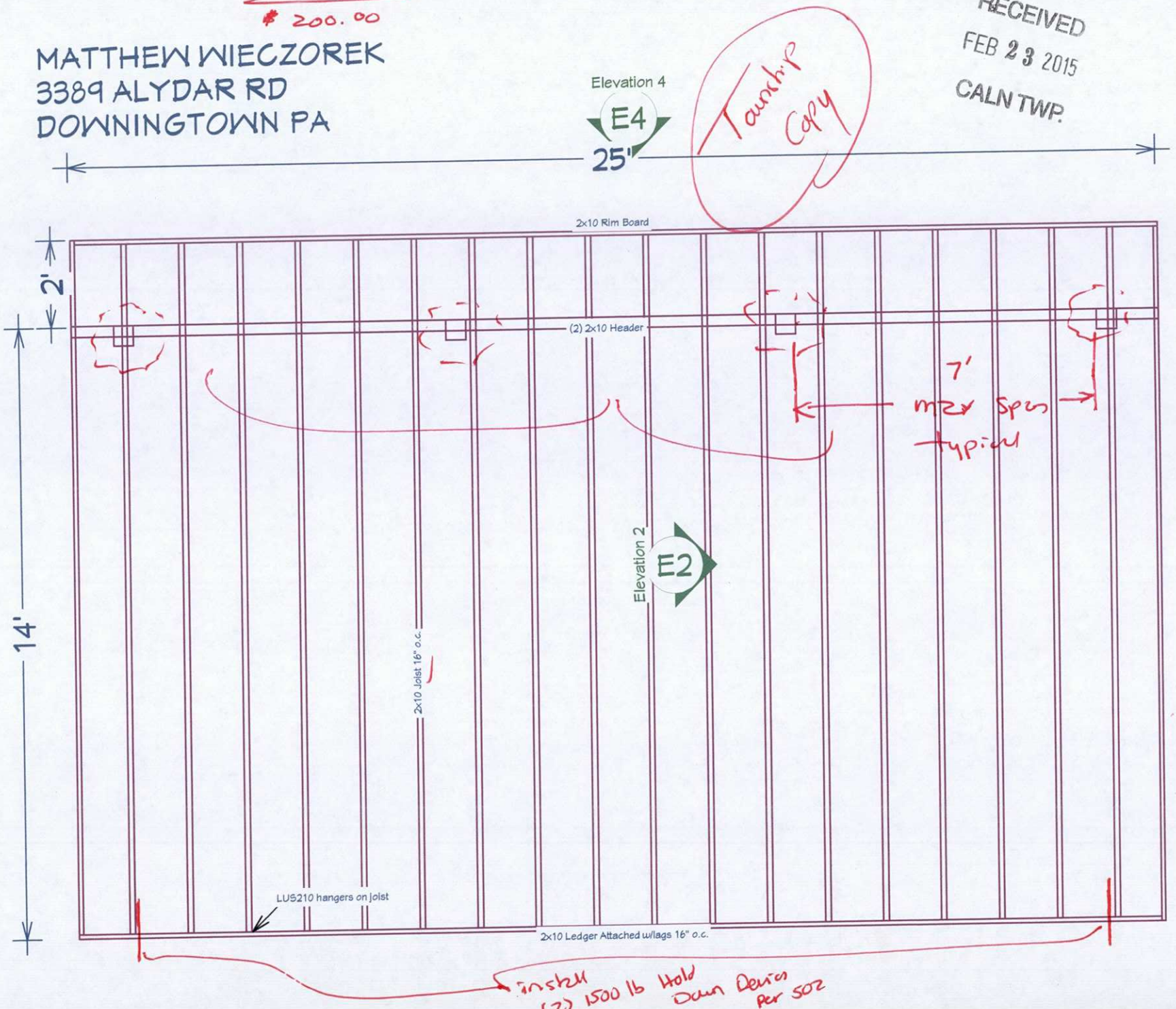

DECK RAIL POST TO RIM BOARD

CONNECTION DETAILS

According to the 2009 *International Residential Code for One and Two-Family Dwellings,* Table R301.5 (ICC, 2009), guardrails and handrails must be designed to withstand a single concentrated load of 200 pounds in any direction. A critical part of this connection is making a strong connection between the guardrail post and the rim board of the deck. In most cases, a ½" through-bolt or carriage bolt is used to make this connection. When installed as instructed in this bulletin, the ThruLok System can replace ½" bolts, meeting the 200 pound design load for this part of the connection.

APPLICATIONS

FastenMaster ThruLOK™ Screw Bolt Fastening System

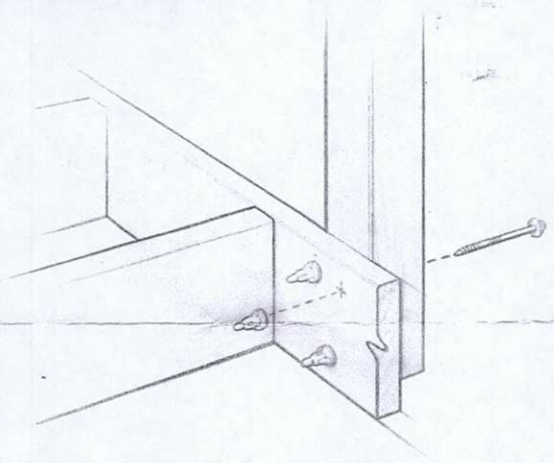

DECK POST TO SINGLE RIM JOIST

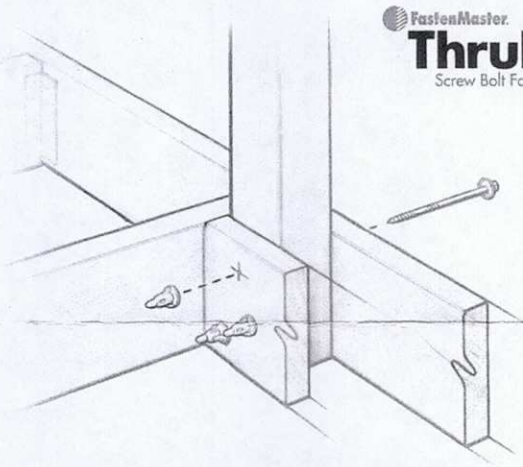

DECK POST TO DOUBLE RIM OR SINGLE RIM WITH BLOCKING

INSTALLATION INSTRUCTIONS

1. Choose the correct length (6¼" or 8") and fastening pattern for each post to rim application based on the illustrated conditions.
2. Mark the surface of the wood with the correct pattern.
3. If a flush mounted head is required, use a 1¼" spade bit to create a ¼" deep recess in the rim or post.
4. Remove the pre-assembled ThruLok nut from the screw and using a ½" drill on low speed/high torque setting, install the ThruLok screw and washer into the outside face of the application until the screw is ¼" to ⅛" from being flush.
5. Thread the ThruLok nut onto the exposed threaded end of the fastener. Firmly twist on the nut by hand until snug.
6. Return to driving the screw in the remaining ¼" to ⅛" until the washer and nut are firmly drawn together.
7. Make sure that the point of the ThruLok fastener has passed the "MIN LINE" printed on the nut.
8. Repeat until all of the fasteners are installed correctly according to the specifications contained in this bulletin.

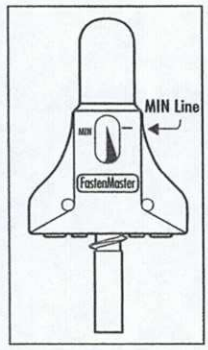

CARRYING BEAM TO NOTCHED SUPPORT POST

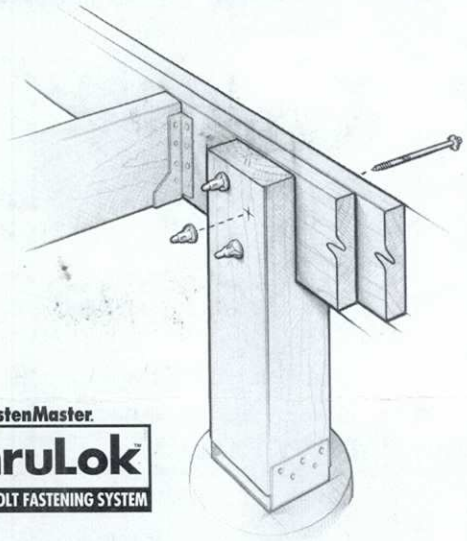

CONNECTION DETAILS

A commonly accepted, code-compliant method of deck construction allows for carrying beams and notched 6x6 support posts to be bolted together. According to the International Residential Code (IRC R502.9), "where posts and beam or girders construction is used to support floor framing, positive connections shall be provided to ensure against uplift and lateral displacement." When installed as shown in this bulletin, the 7" FastenMaster ThruLok restrains against both of these forces equal to traditionally bolted connections with a faster and easier method of installation.

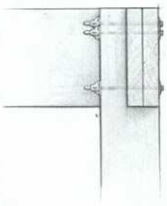

INSTALLATION INSTRUCTIONS

1. Choose the correct fastening pattern based on one of the three conditions listed on this bulletin.
2. Separate the 7" ThruLok screw and washer from the nut.
3. Using a ½" drill on low speed/high torque setting, install the ThruLok screw and washer into the outside face of the application until the screw is ¼" to ⅛" from being flush.
4. Install the ThruLok nut onto the exposed threaded end of the fastener. Firmly twist on the nut by hand until snug.
5. Return to driving the screw in the remaining ¼" to ⅛" until the washer and nut are firmly drawn together.
6. Make sure that the point of the ThruLok fastener has passed the "MIN LINE" printed on the nut. Drive the screw in the remaining ¼" to ⅛" until the washer and nut are firmly drawn together.
7. Repeat until all of the fasteners are installed correctly according to the specifications contained in this bulletin.

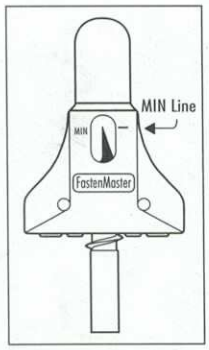

CONDITION 1 – CONTINUOUS BEAM REPLACING 2 BOLTS OF ½" DIAMETER

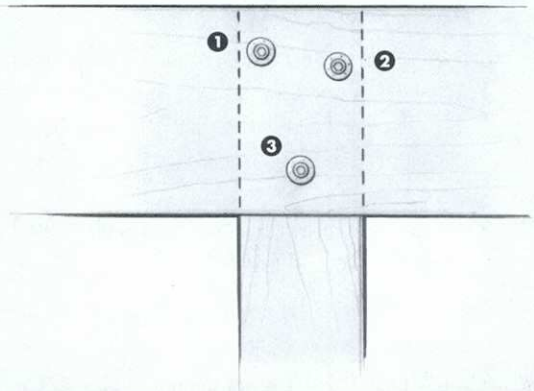

1. Install first screw 1" in from the edge of the post and 2" (+/- ¼") from the top of the beam
2. Install second screw 1" in from the other edge of the post and 3" (+/- ¼") from the top of the beam
3. Install third screw in the center of the post and 2" (+/- ¼") from the bottom of the beam

GUARD POST ATTACHMENTS

Deck guard posts shall be a minimum 4x4 (nominal) with an adjusted bending design value not less than 1,100 psi.

Guard posts for guards which run parallel to the deck joists shall be attached to the outside joist per Figure 25. Guard posts for guards that run perpendicular to the deck joists shall be attached to the rim joist in accordance with Figure 26. Only hold down anchor models meeting these minimum requirements shall be used. Hold down anchors shall have a minimum allowable tension load of 1,800 pounds for a 36" maximum rail height and be installed in accordance with the manufacturer's instructions.

Figure 25. Guard Post to Outside Joist Example

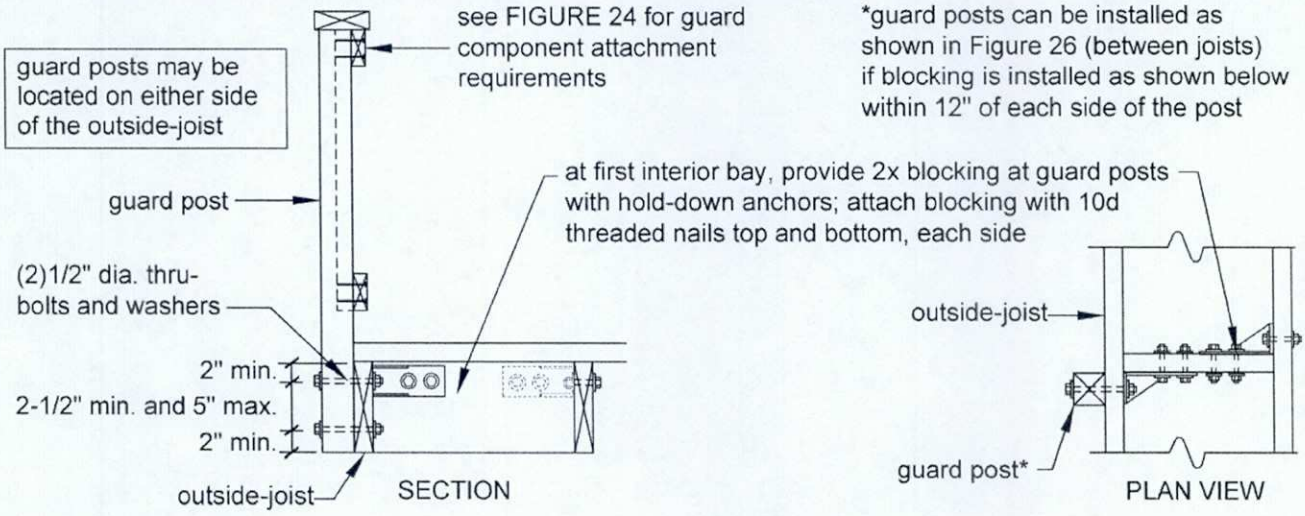

Figure 26. Guard Post to Rim Joist Example

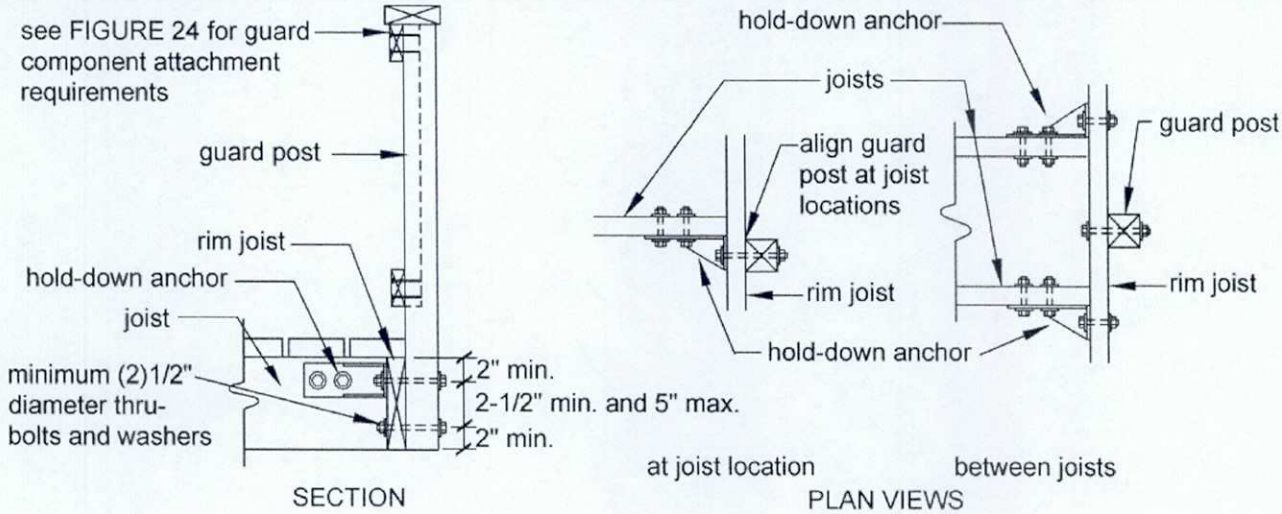

CONDITION 2 – CONTINUOUS BEAM REPLACING 2 BOLTS OF 5/8" DIAMETER

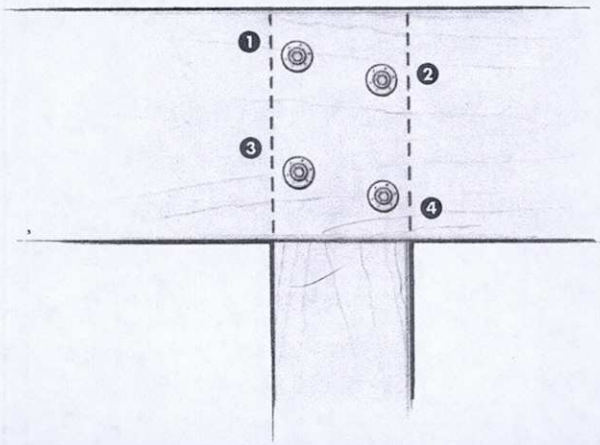

1. Install first screw 1" in from the edge of the post and 2" (+/- ¼") from the top of the beam
2. Install second screw 1" in from the other edge of the post and 3" (+/- ¼") from the top of the beam
3. Install third screw 1" in from the edge of the post and 3" (+/- ¼") from the bottom of the beam
4. Install fourth screw 1" in from the other edge of the post and 2" (+/- ¼") from the bottom of the beam

CONDITION 3 – SPLICED BEAMS REPLACING ½" OR 5/8" BOLTS ON BUTTED BEAMS

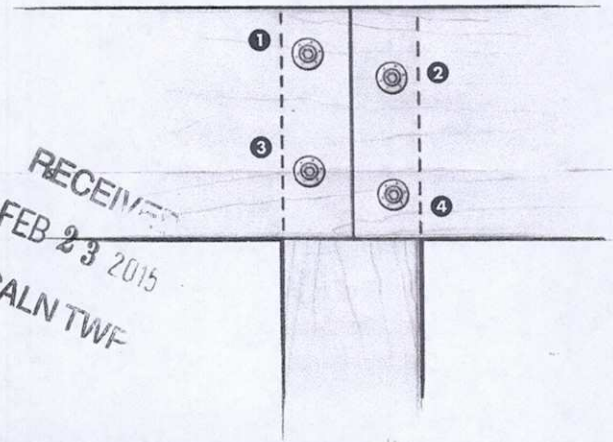

RECEIVED
FEB 23 2015
CALN TWF

1. Install first screw 1" in from the edge of the post and 2" (+/- ¼") from the top of the beam
2. Install second screw 1" in from the other edge of the post and 3" (+/- ¼") from the top of the beam
3. Install third screw 1" in from the edge of the post and 3" (+/- ¼") from the bottom of the beam
4. Install fourth screw 1" in from the other edge of the post and 2" (+/- ¼") from the bottom of the beam

GENERAL FASTENING GUIDELINES

Third party testing in accordance with ASTM D1761 and ICC Acceptance Criteria AC233 was conducted to determine the proper placement and number and fasteners to meet code.

ThruLOK is coated with mechanically applied zinc in accordance with ASTM B695, Class 55. This is compliant with the 2006 International Residential Code® (R319.3) and 2009 IRC (R317.1.3) for use in ACQ pressure treated wood.

The connection details shown in this bulletin apply specifically to 6x6 or 6x8 support posts notched 3" (+/- ¼") to receive double 2x8, 2x10 or 2x12 beams.

Beams and column dimensions should always be checked against local code requirements and designed to support the appropriate deck loads.

As with other bolted connections using wet treated wood, the nut should be inspected and tightened if needed after initial drying period.

Under the following conditions, please consult a design professional:

1. When using wood species with densities lower than Hem Fir. (The wood densities of Southern Pine, Douglas-Fir and Douglas-Fir/Larch are higher than Hem Fir, and therefore acceptable.)
2. Where the combined live and dead loads or wind uplift design values exceed 100 psf.

For questions regarding these or other connections, please contact FastenMaster Technical Support at www.fastenmaster.com or by calling 800·518·3569.

FMTECH-THRCARRY (0713)

FastenMaster® and ThruLOK® are trademarks of OMG, Inc. Patent Pending.
Copyright © 2013 OMG, Inc. All rights reserved.

Release 2.2 www.chesco.org Help Login

Metadata

ChescoViews

Print Find Street Find Intersection

Map Scale: 55 Feet

Find Parcel By: Address Owner UPI PIN

Results | Address

Clear All

- **Find Address (1)**
  - 3389 - ALYDAR RD (1)
    - WIECZOREK MATTHEW J
      3389 ALYDAR RD, CALN

Summary	WIECZOREK MATTHEW J 3389 ALYDAR RD, CALN
PARID	3904 07470000
UPI	39-4-747
Owner 1	WIECZOREK MATTHEW J
Owner 2	MULLANEY MEGHAN R
Mailing Address 1	3389 ALYDAR RD
Mailing Address 2	DOWNINGTOWN PA
Mailing Address 3	
ZIP Code	19335
Deed Book	8011
Deed Page	1940
Deed Recorded Date	10/8/2010
Legal Desc 1	NS ALYDAR RD
Legal Desc 2	LOT 76E & DWG
Acres	
Square Feet	9050
Land Use (Asmnt)	R-10
Class	R
Lot Assessment	$30,530
Property Assessment	$119,050
Total Assessment	$149,580
Last Sale Price	$270,000
Assessment Date	12/19/2014
Property Address	3389 ALYDAR RD
Municipality	CALN
Street Concat	3389 ALYDAR RD
Fair Mkt Val Act 319	
Fair Mkt Val Act 515	
School District	COATESVILLE AREA

more..

Map Contents

Caln Township
Caln Twp. Municipal Authority
253 Municipal Drive
Thorndale,PA 19372

INVOICE #
15-00104

INVOICE DATE: 02/23/15
DUE DATE: 03/25/15

ACCOUNT ID: SMUCKER1
SMUCKER BROTHERS CONSTRUCTION
1330 SHEEP HILL RD
EAST EARL, PA 17519

PERMIT INFORMATION
PERMIT NO: 15-00120
LOCATION: 3389 ALYDAR RD

QUANTITY/UNIT	SERVICE ID	DESCRIPTION	UNIT PRICE	AMOUNT
		Permit No: 15-00120		
1.0000	RC-DECK	DECK MINIMUM Permit No: 15-00120	100.00000	100.00
			TOTAL DUE:	$ 100.00

PAID
FEB 23 2015
COMES

PAYMENT COUPON - PLEASE DETACH AND RETURN THIS PORTION ALONG WITH YOUR PAYMENT

Caln Township
Caln Twp. Municipal Authority
253 Municipal Drive
Thorndale,PA 19372

INVOICE #: 15-00104
DESCRIPTION: Permit No: 15-00120
ACCOUNT ID: SMUCKER1
DUE DATE: 03/25/15
TOTAL DUE: $ 100.00

SMUCKER BROTHERS CONSTRUCTION
1330 SHEEP HILL RD
EAST EARL, PA 17519

Caln Township
Caln Twp. Municipal Authority
253 Municipal Drive
Thorndale,PA 19372

INVOICE #
15-00104

INVOICE DATE: 02/23/15
DUE DATE: 03/25/15

ACCOUNT ID: SMUCKER1
SMUCKER BROTHERS CONSTRUCTION
1330 SHEEP HILL RD
EAST EARL, PA 17519

PERMIT INFORMATION
PERMIT NO: 15-00120
LOCATION: 3389 ALYDAR RD

QUANTITY/UNIT	SERVICE ID	DESCRIPTION	UNIT PRICE	AMOUNT
		Permit No: 15-00120		
1.0000	RC-DECK	DECK MINIMUM Permit No: 15-00120	100.00000	100.00
200.0000/SQF	RC-SFDEC	DECK ADDITIONAL SQUARE FEET Permit No: 15-00120	0.50000	100.00
			TOTAL DUE:	$ 200.00
		Prn Payment: 02/24/15 CK		-100.00
			BALANCE:	$ 100.00

PAID
MAR 13 2015
CODES

PAYMENT COUPON - PLEASE DETACH AND RETURN THIS PORTION ALONG WITH YOUR PAYMENT

Caln Township
Caln Twp. Municipal Authority
253 Municipal Drive
Thorndale,PA 19372

INVOICE #: 15-00104
DESCRIPTION: Permit No: 15-00120
ACCOUNT ID: SMUCKER1
DUE DATE: 03/25/15
TOTAL DUE: $ 100.00

SMUCKER BROTHERS CONSTRUCTION
1330 SHEEP HILL RD
EAST EARL, PA 17519

TOWNSHIP OF CALN
253 MUNICIPAL DR
THORNDALE, PA. 19372
610-384-0600

CERTIFICATE OF OCCUPANCY

Building Permit No.: 13-00480

Zoning District: R-3

Permission is hereby given:

ROHALL ROGER M & MARCIA H
(owner of use)

owner (new)

ROHALL ROGER M & MARCIA H
contractor

Use Type: R RESIDENTIAL

(Lot & Development)

REMARKS

At: 3313 ALYDAR RD

Description: RESIDENTIAL ACCESSORY STRUCTURE - PATIO

8/19/13
Building Inspector DATE

8/19/13
Zoning Officer/Building Code Official DATE

APPROVED AS TO COMPLIANCE
WITH ZONING ORDINANCE.

SCANNED
AUG 20 2013
ELECTRONICALLY FILED

CALN TOWNSHIP

DEPARTMENT OF CODE ENFORCEMENT

Andrew F. Reczek, Director of Code Enforcement
Stephen L. Miller, Code Official / Fire Marshal
Raymond Stackhouse, Code Official / Deputy Fire Marshal
Joseph Arvay, Property Maintenance / Housing Inspector

www.calntownship.org

Phone: 610-384-0600 Ext. 145 Fax: 610-384-0689
Email: smiller@calntownship.org
253 Municipal Drive, P.O. Box 72149 Thorndale, Pa. 19372-0149

MISCELLANEOUS INSPECTION REPORT

DATE: 8/16/13

LOCATION: 3313 Alydar

TYPE OF INSPECTION: Patio Final

- Patio work complete per approval plan
- Grading verbally unchanged
- ok to close

CALN TOWNSHIP

DEPARTMENT OF CODE ENFORCEMENT

Andrew F. Reczek, Director of Code Enforcement
Stephen L. Miller, Code Official / Fire Marshal
Raymond Stackhouse, Code Official / Deputy Fire Marshal
Joseph Arvay, Property Maintenance / Housing Inspector

www.calntownship.org

Phone: 610-384-0600 Ext. 145 Fax: 610-384-0689
Email: smiller@calntownship.org
253 Municipal Drive, P.O. Box 72149 Thorndale, Pa. 19372-0149

MISCELLANEOUS INSPECTION REPORT

DATE: 7/30/13 SM

LOCATION: 3313 Alydar

TYPE OF INSPECTION: Patio Site

- Site Inspection ok per Approved plot plan, Setbacks ok 10 ft Side 20 ft Rear
- No Change in Lot Drainage
- ok to continue

SM

CALN TOWNSHIP
DEPARTMENT OF CODE ENFORCEMENT
Andrew F. Reczek, Director of Code Enforcement
Stephen L. Miller, Code Official / Fire Marshal
Raymond Stackhouse, Code Official / Deputy Fire Marshal
Joseph Arvay, Code Official / Housing Inspector
610.384.0600 fax: 610.384.0689 Email: andyr@calntownship.org
253 Municipal Drive, P.O. Box 72149 Thorndale, Pa 19372-0149
www.calntownship.org

July 18, 2013

Roger and Marcia Rohall
3313 Alydar Rd
Downingtown, PA 19335

PERMIT REVIEW: Patio / 144 sq.ft.

1. **Patio shall maintain a minimum ten (10) foot side yard setback and twenty (20) foot rear yard setback in accordance with Section 155-56 and Section 155-116 A (5).**

2. **It is the property owner's responsibility to provide locations of the deeded property corners to assure all structures are installed completely within these property lines and to further verify all structures meet the setback dimensions of the zoning district. If these locations cannot be established, a property survey will be required prior to installation in accordance with Section 155-115 C of the Caln Township Zoning Code**

3. **Grading shall remain consistent with the grading plan approved for the Land Development project.**

4. **Contractor shall be properly registered with the Pennsylvania Attorney General's office as a Home Improvement Contractor.**

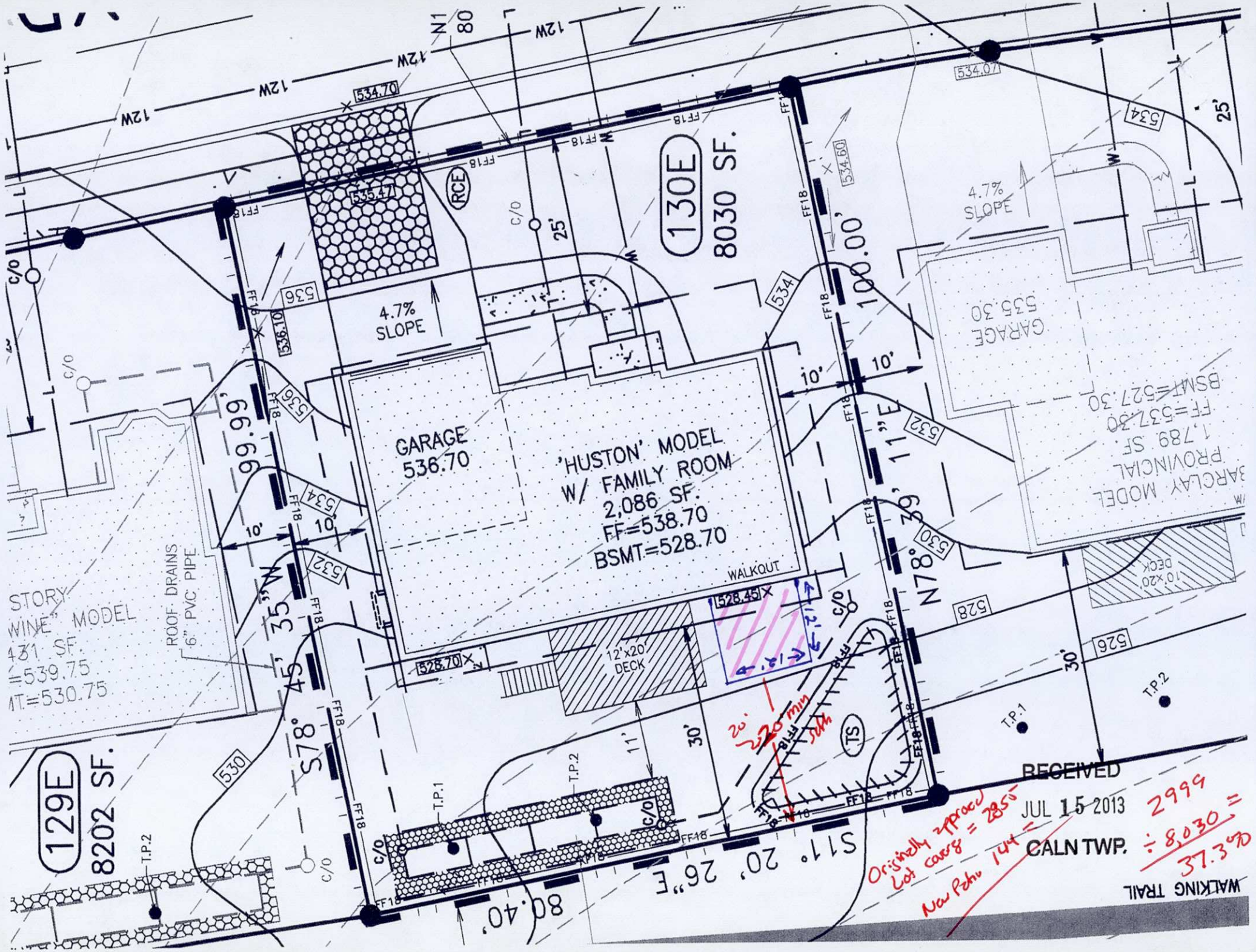

129E
8202 SF.
130E
8030 SF.
GARAGE
536.70
'HUSTON' MODEL
W/ FAMILY ROOM
2,086 SF.
FF=538.70
BSMT=528.70
WALKOUT
12'x20' DECK
4.7% SLOPE
GARAGE
535.30
BARCLAY MODEL
PROVINCIAL
1,789 SF.
FF=537.30
BSMT=527.30
10'x20' DECK
STORY
WINE" MODEL
431 SF.
=539.75
MT=530.75
ROOF DRAINS
6" PVC PIPE
99.99'
S78° 45' 35"W
N78° 39' 11"E
100.00'
80.40'
S11° 20' 26"E
RCE
TS
T.P.1
T.P.2
RECEIVED
JUL 15 2013
CALN TWP.
WALKING TRAIL
Originally approved
Lot coverage = 2855
New Patio 144 =
2999
÷ 8,030 =
37.3%

Caln Township
253 Municipal Drive, Thorndale, PA 19372
610/384-0600, Fax 610/384-0689

ZONING PERMIT APPLICATION – PERMIT FEES ARE NON-REFUNDABLE.

PROPERTY LOCATION 3313 ALYDAR RD. DOWNINGTOWN PA 19335

DATE: 7/15/13

PLOT PLAN REQUIRED. Plan shall include dimensions of all structures (house, driveway, & other accessory structures in relation to property lines, street right-of-way and any easements.

Lot Area 8030 sq. ft.
Building Coverage _____ sq. ft.
Total Impervious Coverage 2999 or 37.3% sq. ft.

REQUIRED INFORMATION

OWNER and/or TENANT
Name: ROGER / MARCIA ROHALL
Address: 3313 ALYDAR RD
DOWNINGTOWN PA 19335
Phone #: _____

REQUIRED INFORMATION

Contractor Information: PA. Lic. # _____
Name: _____
Address: _____
Phone #: _____

RECEIVED
JUL 15 2013
CALN TWP.

Patio ☒ Size 12 x 12
Type Concrete

Shed ☐ Size _____

Forestry Grading ☐
(Provide forestry management & E & S plan)

SIGNS
Wall ☐ Special Event ☐
Freestanding ☐ (date of event) _____
Banner ☐ Grand Opening ☐
Signs illuminated ☐ yes ☐ no

Existing Signs _____
Size of ea. Sign _____
Type of Signs _____
Dimensions _____
Wall Frontage _____

WALL **Type:** _____ **Hgt.** _____
(less than 4' in height)

Provide material detail _____

FENCE **Type:** _____
Height: _____

Provide material detail _____

No wall shall be erected within a floodway, street right-of-way, utility easement, drainage or sewer easement. Please show all easements that exist on your property

SIGNATURE OF APPLICANT Marcia H. Rohall **DATE:** 7/15/13

1614 **DO NOT WRITE IN THIS SPACE – FOR OFFICE USE ONLY**

Permit # 13-00480 | Approved By: [signature] | Permit Fee: 55.00

Date Issued: 7/18/2013 | Zoning District: R-3 Cluster Dev.

REMARKS: See attached Review Comments

TOWNSHIP OF CALN

PERMIT

Permit No: 13-00480

Date Issued: 07/18/13

Location of Work: 3313 ALYDAR RD

Type of Work: CONCRETE PATIO 12X12

PLEASE CONTACT CODE ENFORCEMENT TO SCHEDULE INSPECTIONS 610.384.0600 EXT 220

SITE INSPECTION

FINAL INSPECTION

Owner: ROHALL ROGER M & MARCIA H

Contractor: ROHALL ROGER M & MARCIA H

Parcel #: 39-4-801.0

ZOINING DIRECTOR

THIS PLACARD MUST BE POSTED IN A CONSPICUOUS PLACE ON THE PREMISES, EASILY VISIBLE FROM THE PRINCIPAL STREET, WELL SECURED IF EXPOSED TO THE WEATHER, DURING THE ENTIRE CONSTRUCTION TIME.

WORK MUST BE STARTEDWITHIN 6 MONTHS FROM DATE OF ISSUE

CALN TOWNSHIP

DEPARTMENT OF CODE ENFORCEMENT

Andrew F. Reczek, Director of Code Enforcement
Stephen L. Miller, Code Official/Fire Marshal
Raymond Stackhouse, Code Official/Deputy Fire Marshal
Joseph Arvay, Property Maintenance, Housing Inspector

www.calntownship.org

610-384-0600 fax: 610-384-0689 Email: andyr@calntownship.org
253 Municipal Drive, P.O. Box 72149 Thorndale, Pa. 19372

RECEIVED
JUL 15 2013
CALN TWP.

PROTOCOL FOR ZONING PERMIT SUBMITTAL

1. **Provide plot plan showing all existing & proposed construction No application will be accepted without the above information. Provide setback dimensions from any structure (new or existing, ie – sheds, walls < 4 ft., deck < 30", fences, signs) or paved surface to all property lines.**

2. **Sign permit shall include plot plan. Building dimension with size & location of all new and existing signs. Freestanding signs – show height.**

3. **The minimum fee will be collected at time of application. Caln Township Code Official will calculate total fee. Any additional fees will be collected prior to issuance of Permit. Fee schedule is available on line @ www.calntownship.org**

4. **Caln Township reserves the right to reject any permit application that does not comply with above referenced requirements**

5. **The Zoning Officer has thirty (30) days to review applications.**

6. **Pennsylvania Home Improvement Contractor License number required.**

7. **Forestry Application - Please provide two (2) detailed plot plans showing extent of forestry/grading. Plot plan must show property dimensions as well as all structures (if any) located on same with distances to property line. The applicant must also show limits of disturbances as it pertains to existing structures. Locate all easements, swales, berms, etc. that exist on the property and indicate location of erosion and sedimentation control measures to be used.**

Signature of applicant Marcia H. Rohall

Date 7/15/13

The Crossing at Bailey Station Homeowners Association

C/o BC Communities
4905 Mermaid Boulevard
Wilmington, DE 19808
Phone (302)234-7710 Fax (302)234-7718

RECEIVED
JUL 15 2013
CALN TWP.

Architectural Review Request Application Form

Name: ROGER and MARCIA ROHALL

Address: 3313 ALYDAR RD. DOWNINGTOWN PA 19335

Phone No.: Email:

Description of Request:
12' x 12' concrete patio - lower level outside of basement sliding glass door. Concrete will be natural color with a "broom" finish.

A quick response would be greatly appreciated - We would like to be able to get this project done before construction begins on the sold lot next door. Thanks!

Be sure to give the exact dimensions, colors, materials, and location of your proposed modification or addition. Also provide a copy of any construction plans, drawings, and/or pictures. A copy of your plot plan or mortgage survey showing the location of the proposed modification or addition in relation to your property lines should also be enclosed.

Send your completed application to the above address or fax number. Approval of your request is required before starting any work.

Signature: Marcia H. Rohall Date: 7/10/13

1143
$55.00
Rohall

Date 7.15.13

Township of Caln
Receipt and Proof of Payment

GENERAL FUND

01-10-322-910 -- Police Services
01-10-322-900 -- Street Opening Fee
01-10-331-125 -- Vehicle/Speed Ctrl/Ordinance
01-10-361-305 -- Planning Fees
01-10-361-340 -- Zoning Hearing $ Patio $ 55.00
01-10-362-410 -- Building Permit
01-10-362-415 -- Fire Inspection
01-10-362-452 -- U & O Res & Com
01-10-362-601 -- Housing Annual Rental Fee
01-10-362-602 -- Housing Tenant change Fee
01-10-362-610 -- Contractor License Fee
01-10-363-700 -- Bus Shelters
01-10-380-100 -- Miscellaneous
01-10-380-105 -- Tax Certification Fees
01-10-380-106 -- Newsletter adversiting
01-10-380-107 -- Ticket Sales
01-10-380-110 -- Cell Tower Fees
01-10-314-605 -- Admission Tax
01-10-314-700 -- Mechanical Tax
01-10-387-305 -- Parks/Pavilions
01-10-387-309 -- Recreation Programs
01-_____ --
01-_____ --
01-_____ --

PAID
JUL 15 2013
CALN TOWNSHIP

SEWER FUND

08-10-364-824 -- Inspection Fees
08-_____ --

OTHER FUNDS

3313 Alyda

Department _____ Finance MR

CALN TOWNSHIP

DEPARTMENT OF CODE ENFORCEMENT

Andrew F. Reczek, Director of Code Enforcement
Stephen L. Miller, Code Official/Fire Marshal
Raymond Stackhouse, Code Official / Deputy Fire Marshal
Joseph Arvay, Code Official / Housing Inspector

www.calntownship.org

610-384-0600 fax: 610-384-0689 Email: andyr@calntownship.org
253 Municipal Drive, P.O. Box 72149 Thorndale, Pa. 19372-0149

Building Permit Review Sheet

Zoning District:	R-3 Single-Family Dwelling
Approved As:	Cluster Development
Lot # 130 E	**Address**: 3313 Alydar Road
Lot Area: 8,030 sq.ft.	Minimum Lot Area: 8,000 sq.ft.
Required Setbacks: Front 25'	Side: 10' side
Rear 30'	
Impervious Coverage Limit:	~~30~~ 40% ~~Steep Slopes~~
Building Footprint	2,279 sq.ft
Driveway	501 sq.ft
Other Proposed Coverage's	75 sq.ft.
Total Coverage	2,855 sq.ft. + 144 = 2999
Divided by Lot Area	8,030 sq.ft. ÷ 8,030 = 37.3
Provided Coverage	**35.5%** 37.3% with 12x12 patio
Building Coverage Limit	**30%**
Building Footprint	2,135 sq.ft.
Divided by Lot Area	8,030 sq.ft.
Provided Building Coverage	**26.5%**

Model: Huston Traditional

Options: 9' Foundation Wall (vertically reinforced where > 7' unbalanced fill), Walk-Out Basement, Finished Basement and Full Bathroom, MBR Tray Ceiling, Family Room, Direct Vent Gas Fireplace, Tank-less HW, 12' x 20' Deck, 12' x 12' Patio, Covered Porch, On-Lot Seepage

Building Permit Fee:

Living Space	Basement	948 sq.ft.
	1st Floor	1,560 sq.ft.
	2nd Floor	1,154 sq.ft.
	Total Living Space	3,662 sq.ft
		X . 50 = **$ 1,831.00**
Accessory Space:	Basement (utility)	612 sq.ft.
	Garage	527 sq.ft.
	Porch	48 sq.ft.
	Patio	144 sq.ft
	Deck	240 sq.ft.
	Other	0 sq.ft.
	Total Accessory	1,571 sq.ft
		X .25= **$ 392.75**
	Total Building Permit Fee	**$ 2,223.75**

Bambi Warren

From: Andy Reczek
Sent: Thursday, July 18, 2013 11:50 AM
To: Bambi Warren
Subject: 3313 Alydar Rd.

Bambi
See is you can send me the Impervious information sheet I prepared for this original permit from DocStar
Thanks

TOWNSHIP OF CALN
253 MUNICIPAL DR
THORNDALE, PA. 19372
610-384-0600

CERTIFICATE OF OCCUPANCY

Building Permit No.: 14-00126

Zoning District: R-3 CLUSTER DEV.

Permission is hereby given:

FOY MICHAEL D
(owner of use)

3413 ALYDAR RD, DOWNINGTOWN, PA 19335
owner (new)

SMUCKER BROTHERS CONSTRUCTION
contractor

Use Type: R RESIDENTIAL

(Lot & Development)

REMARKS

At: 3413 ALYDAR RD

Description: ACCESSORY DECK 324 SQ. FT.

Andrew F. Reczek
Building Inspector DATE 5/7/14

Andrew F. Reczek
Zoning Officer/Building Code Official DATE 5/7/14

APPROVED AS TO COMPLIANCE WITH ZONING ORDINANCE.

CALN TOWNSHIP

DEPARTMENT OF CODE ENFORCEMENT

Andrew F. Reczek, Director of Code Enforcement
Stephen L. Miller, Code Official / Fire Marshal
Raymond Stackhouse, Code Official / Deputy Fire Marshal
Joseph Arvay, Property Maintenance / Housing Inspector

www.calntownship.org

Phone: 610-384-0600 Ext. 145 Fax: 610-384-0689
Email: smiller@calntownship.org
253 Municipal Drive, P.O. Box 72149 Thorndale, Pa. 19372-0149

MISCELLANEOUS INSPECTION REPORT

DATE: 5/5/2014

LOCATION: 3413 Alyder drive

TYPE OF INSPECTION: Final Deck

Guard railing posting properly Blocked + connected in accordance with the AWC Detail

Guard rail maintained a height of 36½" a finish decking + provided decorative ballister @ 3" o.c.

Stairs risers maintained a consistent interval of 7" with a thread depth of 10": grading needed @ the bottom to be done by the homeowner

Hold down tension devices installed along with diagonal bracing

OK for Final Use + Occupancy APR

CALN TOWNSHIP

DEPARTMENT OF CODE ENFORCEMENT

Andrew F. Reczek, Director of Code Enforcement
Stephen L. Miller, Code Official / Fire Marshal
Raymond Stackhouse, Code Official / Deputy Fire Marshal
Joseph Arvay, Property Maintenance / Housing Inspector

www.calntownship.org

Phone: 610-384-0600 Ext. 145 Fax: 610-384-0689
Email: smiller@calntownship.org
253 Municipal Drive, P.O. Box 72149 Thorndale, Pa. 19372-0149

MISCELLANEOUS INSPECTION REPORT

OK

DATE: 4/11/19 (SA)

LOCATION: 3413 Alyder

TYPE OF INSPECTION: Deck Rough

- 6x6 posts / Notched for Beam / Thru Bolted using Foster master Thru Lok - Attached.
- 2x10 Beams Doubled
- 2x10 Joists 16" o.c. , on Hangers at Ledger
- 2x10 Ledger , Properly Lagged , Flashed
- (2) Hold controls ok
- Gusset posts , 4x4 , mechanically Attached using the Foster master Thru Lok system

Caps attached

ok to continue

(SA)

34/3 Alydar Room on 4/4/09

DECK RAIL POST TO RIM BOARD

CONNECTION DETAILS

According to the 2009 *International Residential Code for One and Two-Family Dwellings,* Table R301.5 (ICC, 2009), guardrails and handrails must be designed to withstand a single concentrated load of 200 pounds in any direction. A critical part of this connection is making a strong connection between the guardrail post and the rim board of the deck. In most cases, a ½" through-bolt or carriage bolt is used to make this connection. When installed as instructed in this bulletin, the ThruLok System can replace ½" bolts, meeting the 200 pound design load for this part of the connection.

APPLICATIONS

FastenMaster ThruLok™ SCREW BOLT FASTENING SYSTEM

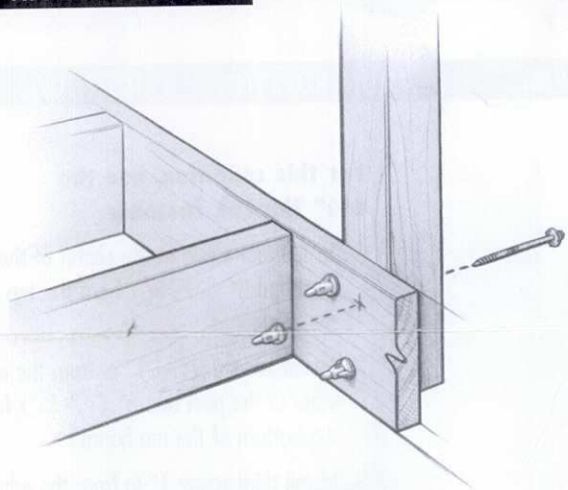

DECK POST TO SINGLE RIM JOIST

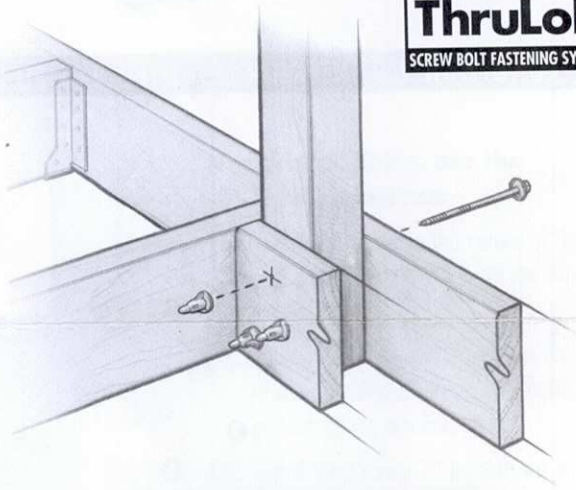

DECK POST TO DOUBLE RIM OR SINGLE RIM WITH BLOCKING

INSTALLATION INSTRUCTIONS

1. Choose the correct length (6¼" or 8") and fastening pattern for each post to rim application based on the illustrated conditions.
2. Mark the surface of the wood with the correct pattern.
3. If a flush mounted head is required, use a 1¼" spade bit to create a ¼" deep recess in the rim or post.
4. Remove the pre-assembled ThruLok nut from the screw and using a ½" drill on low speed/high torque setting, install the ThruLok screw and washer into the outside face of the application until the screw is ¼" to ⅛" from being flush.
5. Thread the ThruLok nut onto the exposed threaded end of the fastener. Firmly twist on the nut by hand until snug.
6. Return to driving the screw in the remaining ¼" to ⅛" until the washer and nut are firmly drawn together.
7. Make sure that the point of the ThruLok fastener has passed the "MIN LINE" printed on the nut.
8. Repeat until all of the fasteners are installed correctly according to the specifications contained in this bulletin.

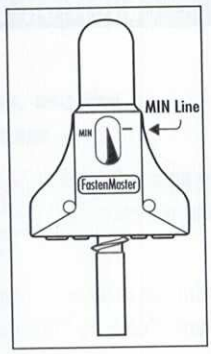

CARRYING BEAM TO NOTCHED SUPPORT POST

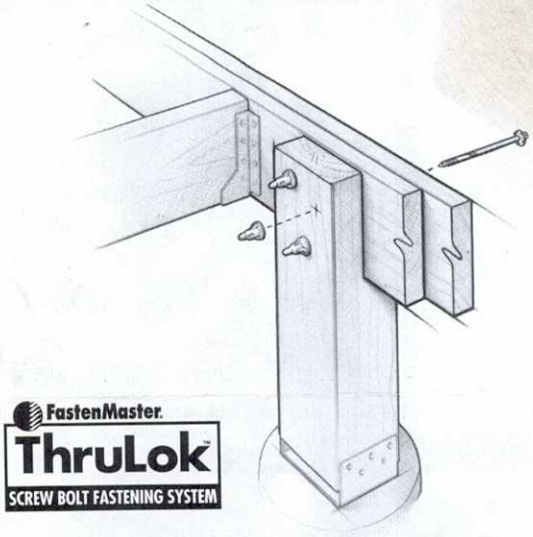

CONNECTION DETAILS

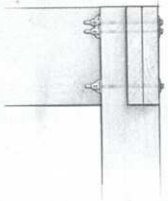

A commonly accepted, code-compliant method of deck construction allows for carrying beams and notched 6x6 support posts to be bolted together. According to the International Residential Code (IRC R502.9), "where posts and beam or girders construction is used to support floor framing, positive connections shall be provided to ensure against uplift and lateral displacement." When installed as shown in this bulletin, the 7" FastenMaster ThruLok restrains against both of these forces equal to traditionally bolted connections with a faster and easier method of installation.

INSTALLATION INSTRUCTIONS

1. Choose the correct fastening pattern based on one of the three conditions listed on this bulletin.
2. Separate the 7" ThruLok screw and washer from the nut.
3. Using a ½" drill on low speed/high torque setting, install the ThruLok screw and washer into the outside face of the application until the screw is ¼" to ⅛" from being flush.
4. Install the ThruLok nut onto the exposed threaded end of the fastener. Firmly twist on the nut by hand until snug.
5. Return to driving the screw in the remaining ¼" to ⅛" until the washer and nut are firmly drawn together.
6. Make sure that the point of the ThruLok fastener has passed the "MIN LINE" printed on the nut. Drive the screw in the remaining ¼" to ⅛" until the washer and nut are firmly drawn together.
7. Repeat until all of the fasteners are installed correctly according to the specifications contained in this bulletin.

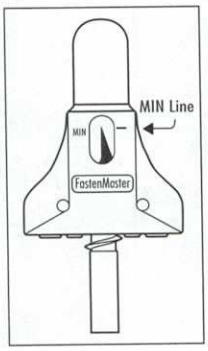

CONDITION 1 – CONTINUOUS BEAM REPLACING 2 BOLTS OF ½" DIAMETER

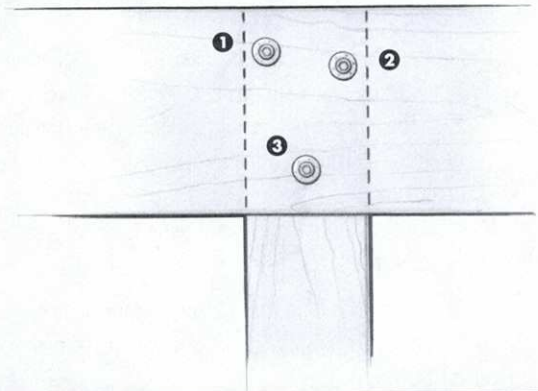

1. Install first screw 1" in from the edge of the post and 2" (+/- ¼") from the top of the beam
2. Install second screw 1" in from the other edge of the post and 3" (+/- ¼") from the top of the beam
3. Install third screw in the center of the post and 2" (+/- ¼") from the bottom of the beam

TOWNSHIP OF CALN
253 MUNICIPAL DR
THORNDALE, PA. 19372
610/384-0600

24 hrs. notice required for inspection scheduling

INSPECTION ASSIGNMENT SHEET

Building Permit No. 14-00126

Location 3413 ALYDAR ROAD, DOWNINGTOWN, PA 19335

Owner FOY, MICHAEL MR. AND MRS.

Contractor SMUCKER BROS. CONSTRUCTION

Description DECK

Comments SEE COPY OF PERMIT REVIEW LETTER ATTACHED AND AWC DETAIL

SITE INSPECTION PRIOR TO BEGINNING CONSTRUCTION

FOOTER INSPECTION PRIOR TO POURING

ROUGH FRAMING INSPECTION PRIOR TO INSULATION OR INTERIOR COVERING (rough elec

FINAL INSPECTION (performed after work is complete and PRIOR TO USING OR OCCUPYING CO

4 Footing inspected 4/9/2014 + found 4 excavated pier footing 12" in diameter 36" in depth: Footing bottoms firm + unyielding consisting of shale + silty soils. piers position approx 6' on center to allow for 2 (2) 2x10 support beam span
OK to pour (APV)

TOWNSHIP OF CALN

PERMIT

Permit No: 14-00126

Date Issued: 03/28/14

Location of Work: 3413 ALYDAR RD

Type of Work: DECK

SEE ATTACHED PERMIT REVIEW COMMENTS
AND AWC DETAIL

Owner: FOY MICHAEL D

Contractor: SMUCKER BROTHERS CONSTRUCTION

Parcel #: 39-4-743.0

Andrew F. Reczek

BUILDING CODE OFFICIAL

THIS PLACARD MUST BE POSTED IN A CONSPICUOUS PLACE ON THE PREMISES, EASILY VISIBLE FROM THE PRINCIPAL STREET, WELL SECURED IF EXPOSED TO THE WEATHER, DURING THE ENTIRE CONSTRUCTION TIME.

WORK MUST BE STARTEDWITHIN 6 MONTHS FROM DATE OF ISSUE

CALN TOWNSHIP
DEPARTMENT OF CODE ENFORCEMENT
Andrew F. Reczek, Director of Code Enforcement
Stephen L. Miller, Code Official / Fire Marshal
Raymond Stackhouse, Code Official / Deputy Fire Marshal
Joseph Arvay, Code Official / Housing Inspector
610.384.0600 fax: 610.384.0689 Email: areczek@calntownship.org
253 Municipal Drive, P.O. Box 72149 Thorndale, Pa 19372-0149
www.calntownship.org

March 28, 2014

Michael Foy
3413 Alydar Rd.
Downingtown, PA 19335

PERMIT REVIEW: Building Permit / Accessory Deck 324sq.ft)

1. **All work shall comply with the 2009 International Residential Code the Caln Township Zoning Code and the recorded Homeowners Association Documents.**

2. **Maintain a minimum 20' rear yard setback in accordance with the R-3 Zoning District / Cluster Development requirements and Sections 155- 56 and 155-116 A (5)**

3. All new deck footings shall be placed on firm and stable soils at a minimum depth of 36" below grade. **Attachment shall be provided at the connection between post and footing to prevent uplift.**

4. **(2) 2" x10" beam is permitted to span a maximum 7'0" in accordance with Table R502.5 (2). Bearing and attachment shall be provided at each supporting post.**

5. 2" x 10" floor joists, SPF #2, 16" on center shall be limited to 15'5"; **Joist cantilevers shall not exceed 3' in accordance with Table R502.3.3 (2).** Adequate bearing shall be provided for all joist members. Joist hangers shall be provided as required for bearing

6. **Ledger shall be connected to the primary structure in accordance using a minimum ½ lag screw spaced 13" on center. Lag shall penetrate the interior surface of the rim board.**

7. **Install two (2) 1,500 Hold Down Tension devices in accordance with Section R502.2.2.3**

8. **Lateral bracing shall be provided to limit deck movement.**

9. Composite decking shall be installed in accordance with the manufacture's specification.

10. Flashing shall be provided at the connection between ledger board and the main structure.

11. **Riser heights at exterior doors shall not exceed 7 ¾"**

12. **Stair risers shall not exceed 8 ¼ " in height, Tread depths shall not be less than 9". All risers shall be enclosed and shall not differ in height more than 3/8"**

13. **Guard railings are required on all raised surfaces (decks, ramps or patios) 30" or greater above grade and on all open sides of stairways with 4 or more risers. Guard Railings shall be a minimum 36" in height and be capable of preventing the passage of a 4" sphere. Guards shall support a 200 lb. lateral load at any point along the top rail in accordance with the American Wood Council detail attached**

14. Contractors shall be properly registered with the Commonwealth of Pennsylvania Attorney General's office

15. **Inspections shall be scheduled allowing a minimum of 24-hr notice by calling 610-384-0600. Required inspections include; 1) Site, 2) Footings prior to pour, 3) Rough Framing, 4) Final**

2047

RECEIVED
MAR 21 2014
CALN TWP.

CALN TOWNSHIP
253 Municipal Drive, Thorndale, PA 19372
610/384-0600, Fax – 610/384-0689
BUILDING PERMIT APPLICATION – PERMIT FEES ARE NON-REFUNDABLE
Minimum fee due at time of permit application

Address 3413 Alydar DR **Subdivision** _____ **Lot #** _____ **Zoning Dist.** R3

Building Improvement
- New Building ☐
- Addition ☐
- Alteration ☐
- Basement ☐
- Deck /Ramp ☒
- Demolition ☐
- Driveway ☐
- Fire Protection
- Sprinkler/Alarm ☐
- Hot Tub ☐
- Tenant fit-out ☐
- Mechanical ☐
- Plumbing ☐
- Pool ☐
- Roof ☐
- Shed (>1000 sq. ft.) ☐
- Tank ☐
- Other ☐

IDENTIFICATION – To be completed by all applicants

OWNER
Name: Michael Foy
Address: 3413 ALYDAR RD
Downingtown PA
Phone #: _____

Home Improvement Contractor # PA083776
Expiration Date: 08/13/15
Name: Smucker Bros Construction
Address: 1330 Sheep Hill Rd
East Earl PA
Phone #: 717-587-8818

Residential ☒ Location: _____
Commercial ☐ Location: _____

DATE: 03/21/13
Job Cost: 8,700.00

Sewage Disposal
Public ☒ Private ☐

Water Supply
Public ☒ Private ☐

Type of Construction
IA ☐ IB ☐
IIA ☐ IIB ☐
IIIA ☐ IIIB ☐
IV ☐
VA ☐ VB ☐

Site located in Flood Area
Yes ☐ No ☒

Submit floor plan showing Location w/clearances & material types /Mechanical
Central AC?
Yes ☐ No ☒
Will there be an Elevator?
Yes ☐ No ☒

Type of Heating Fuel
- Gas ☐
- Oil ☐
- Electric ☐
- Coal ☐
- Other ☐

Residential Building Area:
# of Stories 1
Basement _____
Garage _____
1st. Floor _____
2nd. Floor _____
Total Habitable Space Deck 320 sq ft

Commercial Projects:
Use Group
Classification _____
Occupancy
Load _____
Sprinklered ☐ Yes ☐ No

Residential Bldg. Only
Bedrooms _____
Bathrooms _____

Residential Bldg. Only
Bedrooms _____
Bathrooms _____

Lot Area _____ sq.ft.
Building Coverage 320 sq.ft.
Total Impervious Coverage _____ sq.ft.

 # Off Street Parking Spaces _____

SIGNATURE OF APPLICANT: [signature] **DATE:** 03/21/14

DESCRIPTION /COMMERCIAL ACTIVITIES Build Deck 16x20 w/ steps /Cluster Dev.

Under the provisions of Ordinance No. 2013-03, you may be entitled to a property tax exemption on your contemplated alteration or new construction. An application for exemption may be secured from the Code Enforcement office & must be filed with the Township at the time a building permit is secured.

DO NOT WRITE IN THIS SPACE – FOR OFFICE USE ONLY

Permit # 14-00126 | Approved By: [signature] | Permit Fee: $160.00 | Date Issued: 3/28/2014

REMARKS: See attached Review Comments + AWC Detail

P:\Permit Applications\Permit Applications\Building Permit application .docx - Lerta.docx

Release 2.2 www.chesco.org Help Login

ChescoViews

Metadata

Print Find Street Find Intersection

Map Scale: 55 Feet

Find Parcel By: Address Owner UPI PIN

Results | Address

Clear All

- Find Address (1)
  - 3413 - ALYDAR RD (1)
    - FOY MICHAEL D
      3413 ALYDAR RD, CALN

Summary	FOY MICHAEL D 3413 ALYDAR RD, CALN
PARID	3904 07430000
UPI	39-4-743
Owner 1	FOY MICHAEL D
Owner 2	
Mailing Address 1	3413 ALYDAR RD
Mailing Address 2	DOWNINGTOWN PA
Mailing Address 3	
ZIP Code	19335
Deed Book	7812
Deed Page	412
Deed Recorded Date	11/18/2009
Legal Desc 1	NS ALYDAR RD
Legal Desc 2	LOT 72E & DWG
Acres	
Square Feet	8000
Land Use (Asmnt)	R-10
Class	R
Lot Assessment	$30,360
Property Assessment	$128,810
Total Assessment	$159,170
Last Sale Price	$300,320
Assessment Date	12/20/2013
Property Address	3413 ALYDAR RD
Municipality	CALN
Street Concat	3413 ALYDAR RD
Fair Mkt Val Act 319	
Fair Mkt Val Act 515	
School District	COATESVILLE AREA

more..

Map Contents

- PARCEL DIMENSIONS
  - Parcel Dimensions 600

RECEIVED
MAR 21 2014
CALN TWP.

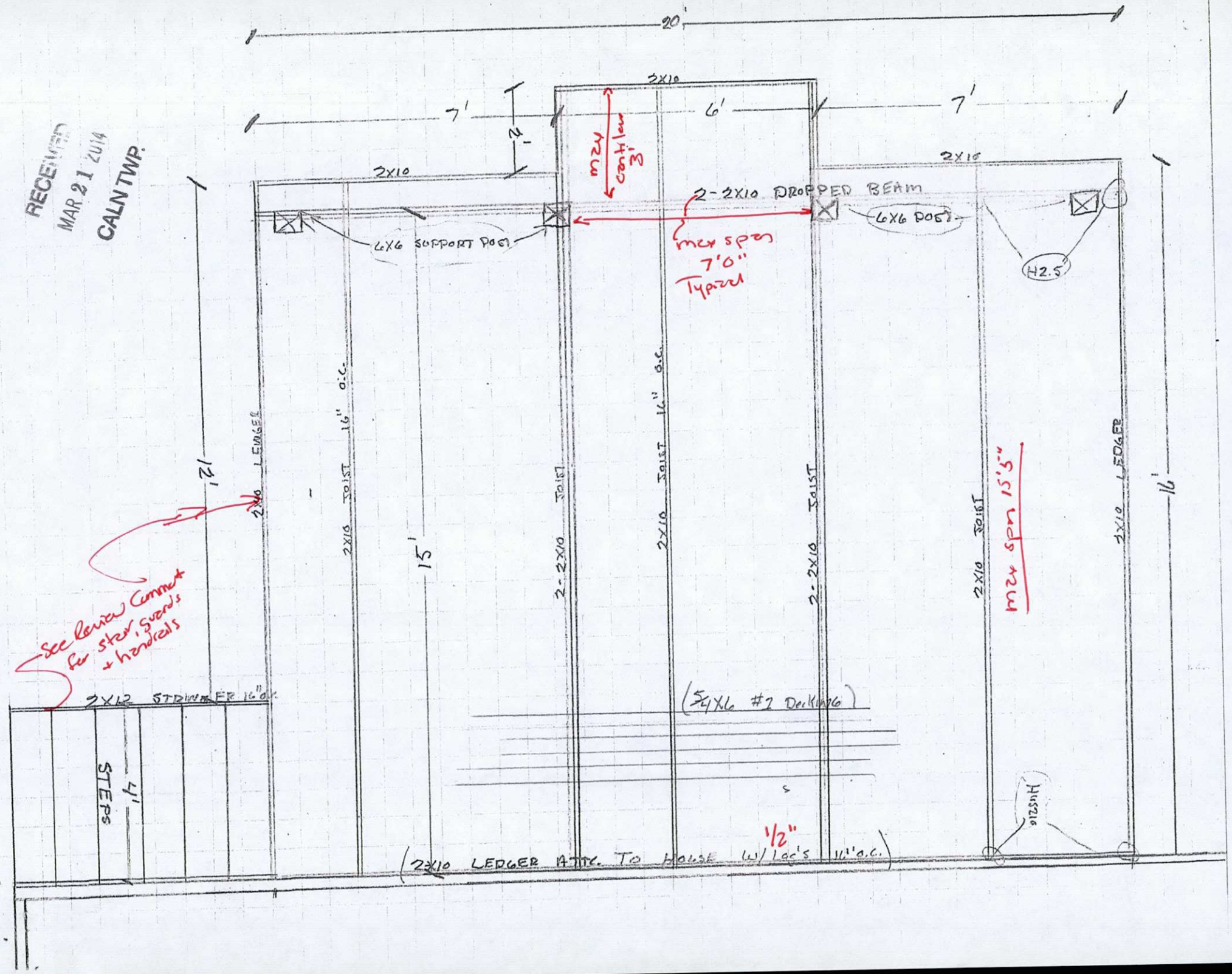

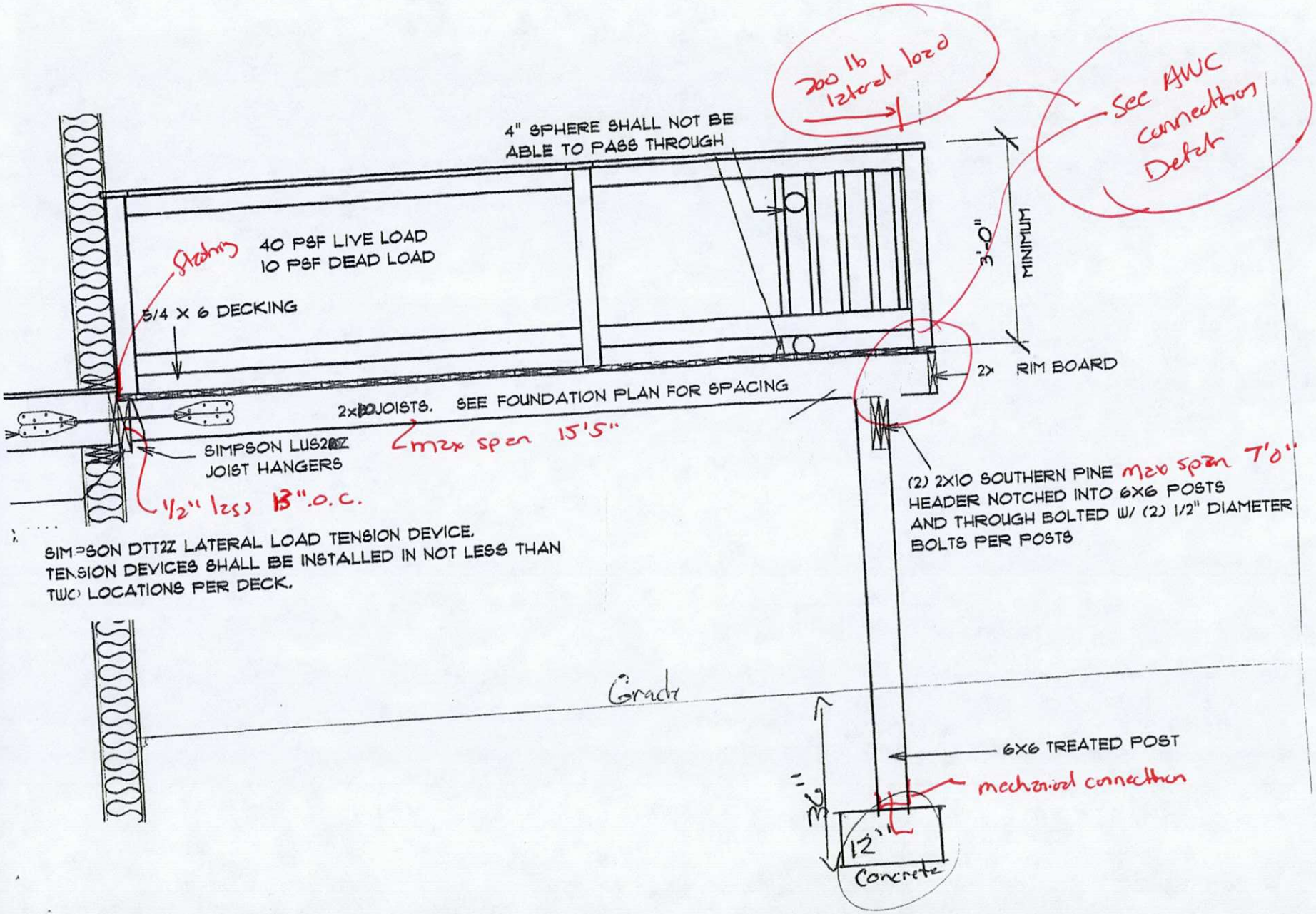
200 lb lateral load
See AWC connection Detail
4" SPHERE SHALL NOT BE ABLE TO PASS THROUGH
Stairs
40 PSF LIVE LOAD
10 PSF DEAD LOAD
5/4 X 6 DECKING
3'-0" MINIMUM
2x RIM BOARD
2x10 JOISTS. SEE FOUNDATION PLAN FOR SPACING
max span 15'5"
SIMPSON LUS210Z JOIST HANGERS
1/2" lags 13".o.c.
SIMPSON DTT2Z LATERAL LOAD TENSION DEVICE. TENSION DEVICES SHALL BE INSTALLED IN NOT LESS THAN TWO LOCATIONS PER DECK.
(2) 2X10 SOUTHERN PINE HEADER NOTCHED INTO 6X6 POSTS AND THROUGH BOLTED W/ (2) 1/2" DIAMETER BOLTS PER POSTS
max span 7'0"
Grade
6X6 TREATED POST
mechanical connection
36"
12"
Concrete

Figure 8. Post-to-Beam Attachment Requirements

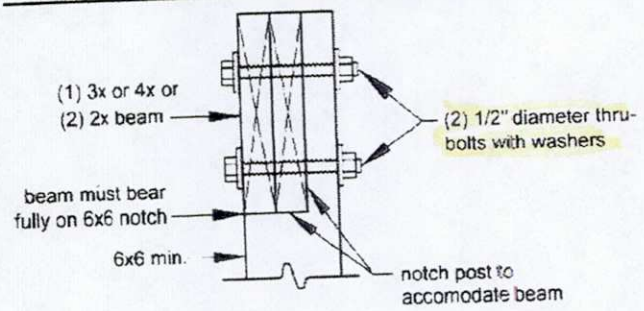

Figure 9. Prohibited Post-to-Beam Attachment Condition

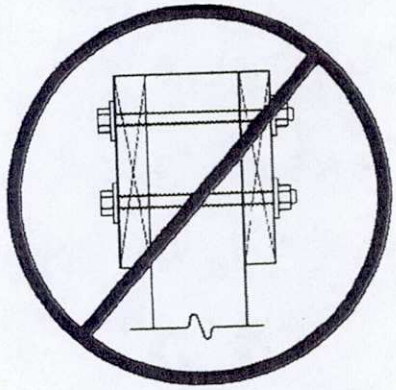

RIM JOIST REQUIREMENTS

Attach a continuous rim joist to the ends of joists as shown in Figure 11. Attach decking to the rim joist as shown in Figure 11. For more decking attachment requirements, see DECKING REQUIREMENTS.

Figure 10. Alternate Approved Post-to-Beam Post Cap Attachment

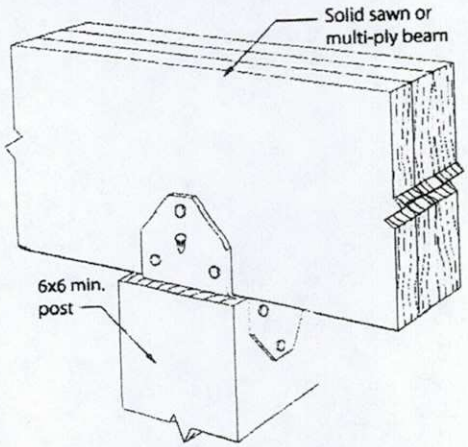

Figure 11. Rim Joist Connection Details

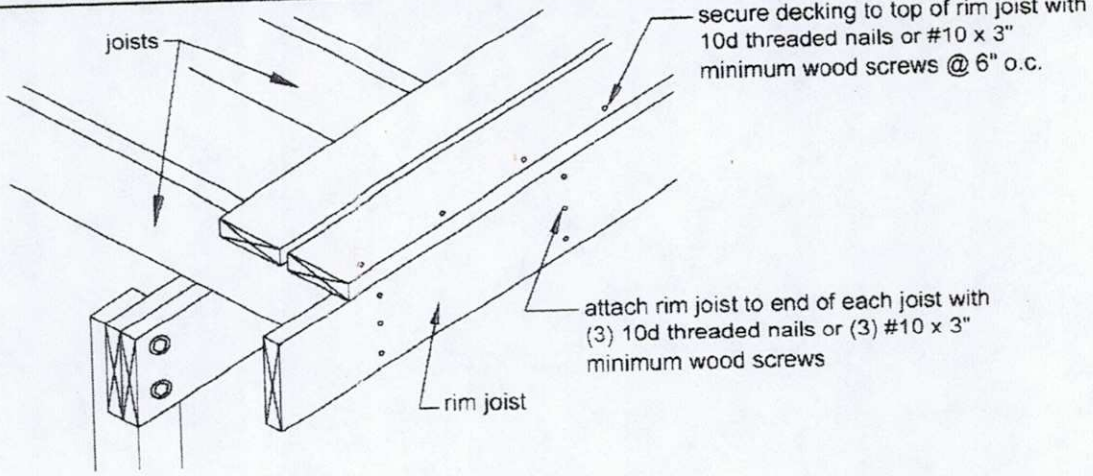

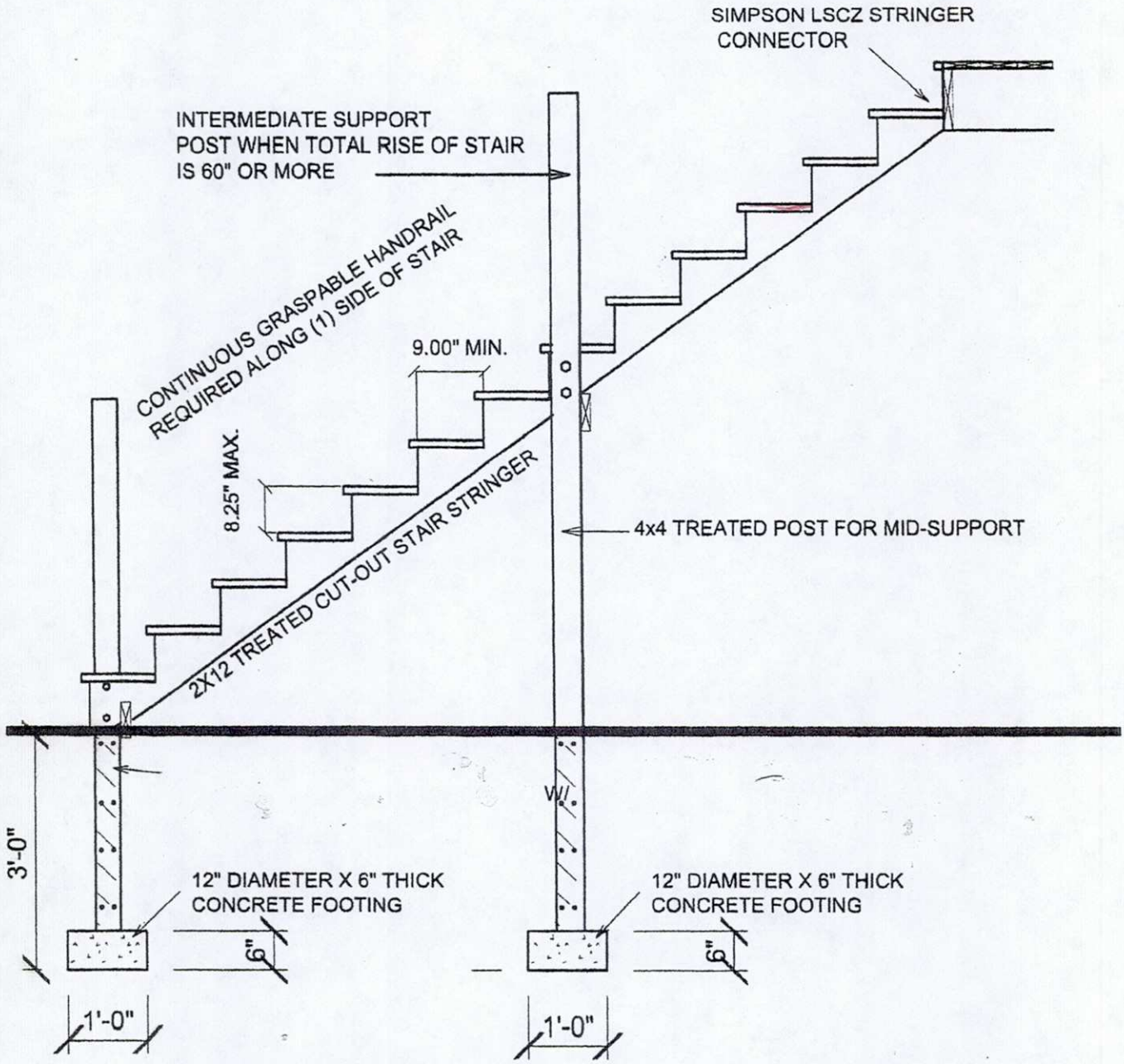

STAIR SECTION

SCALE: 1/2" = 1'-0"

RECEIVED
MAR 21 2014
CALN TWP.

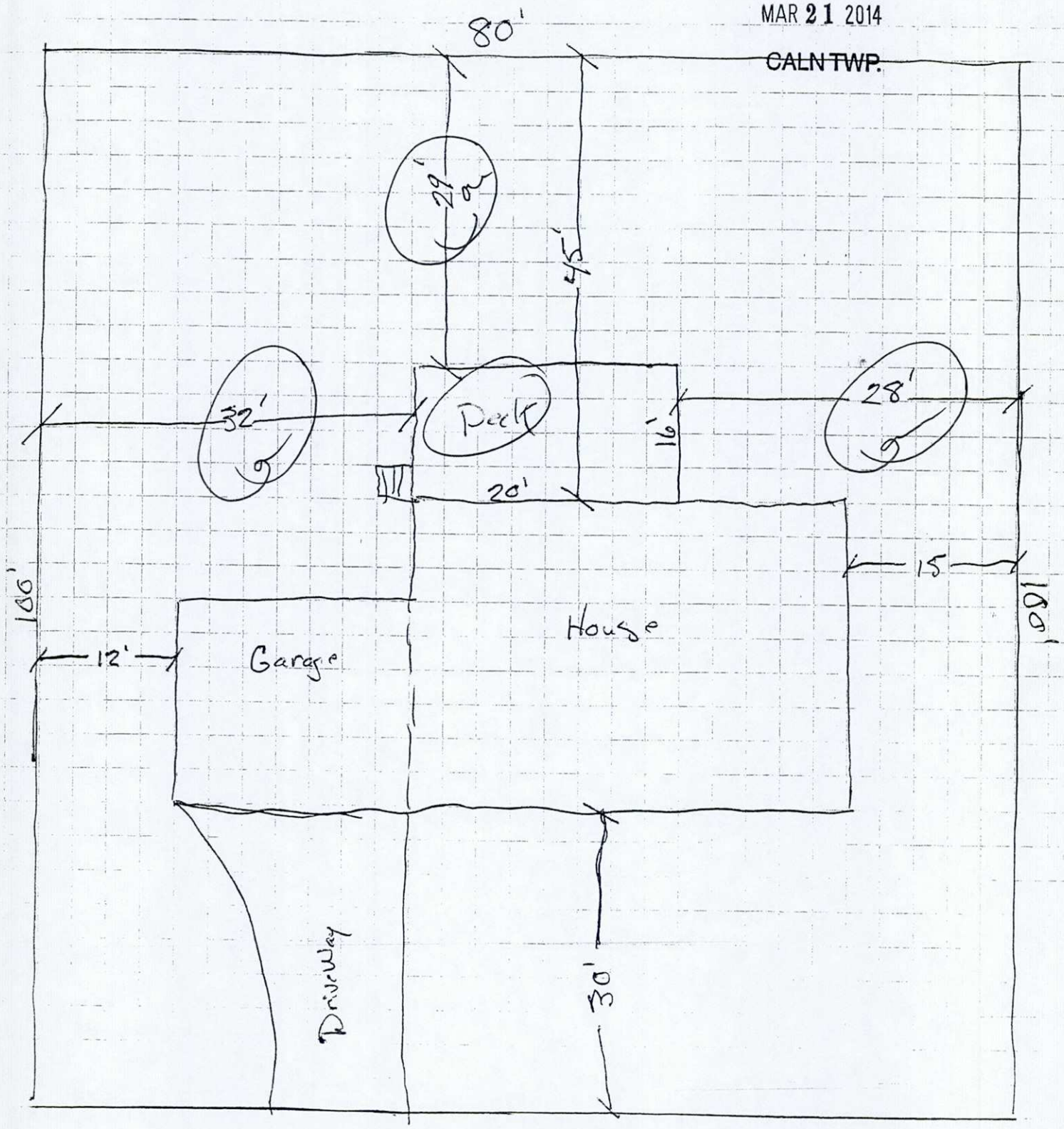

ALYDAR DR

RECEIVED
MAR 21 2014
CALN TWP.

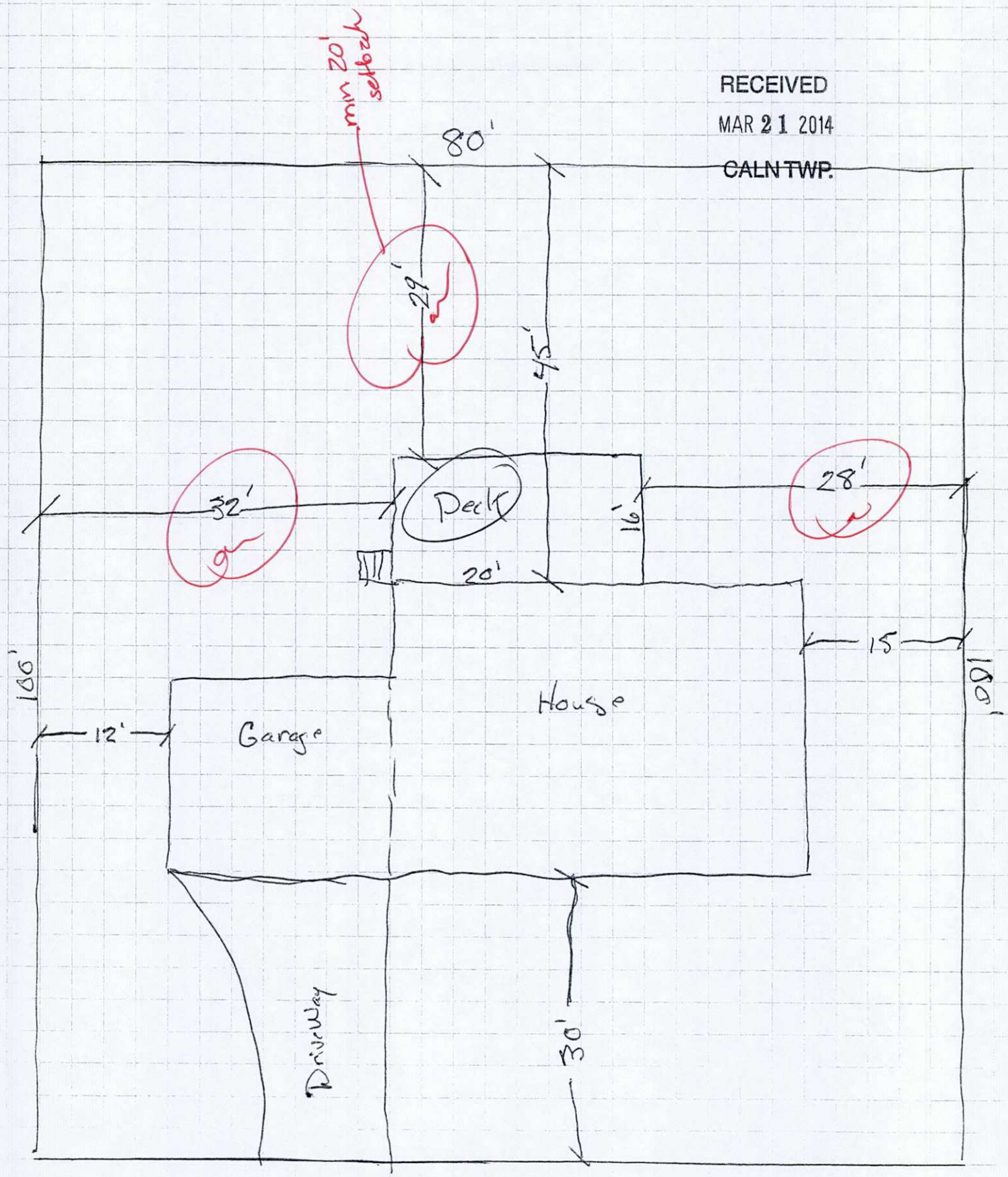

ALYDAR DR

Site Layout

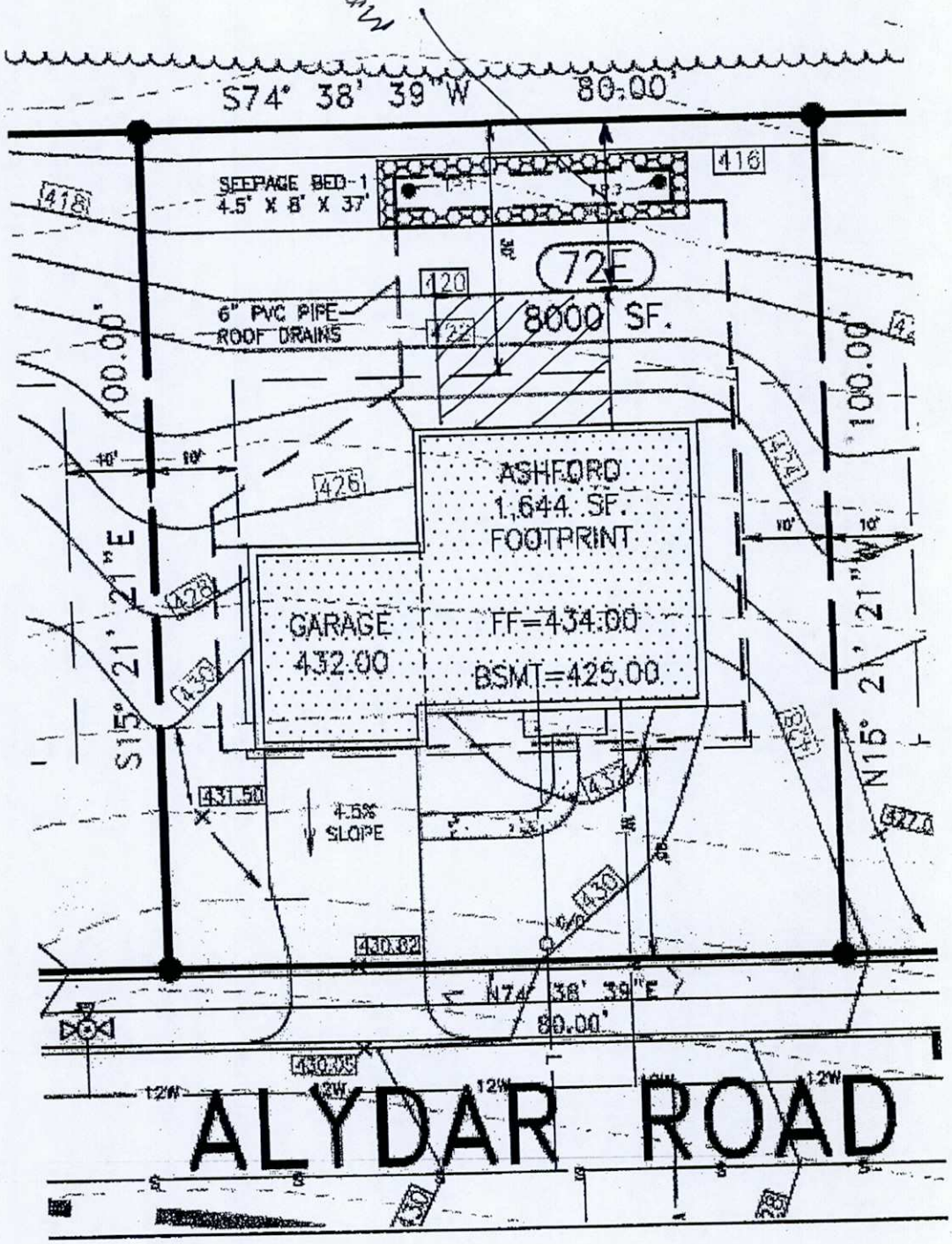
S74° 38' 39"W
80.00'
SEEPAGE BED-1
4.5' X 8' X 37'
416
418
72E
420
6" PVC PIPE
ROOF DRAINS
422
8000 SF.
100.00'
100.00'
10'
10'
426
ASHFORD
1,644 SF.
FOOTPRINT
GARAGE
432.00
FF=434.00
BSMT=425.00
S15° 21' 21"E
N15° 21' 21"W
428
430
431.50
4.5%
SLOPE
430.82
N74° 38' 39"E
80.00'
ALYDAR ROAD

GUARD POST ATTACHMENTS

Deck guard posts shall be a minimum 4x4 (nominal) with an adjusted bending design value not less than 1,100 psi.

Guard posts for guards which run parallel to the deck joists shall be attached to the outside joist per Figure 25. Guard posts for guards that run perpendicular to the deck joists shall be attached to the rim joist in accordance with Figure 26. Only hold down anchor models meeting these minimum requirements shall be used. Hold down anchors shall have a minimum allowable tension load of 1,800 pounds for a 36" maximum rail height and be installed in accordance with the manufacturer's instructions.

Figure 25. Guard Post to Outside Joist Example

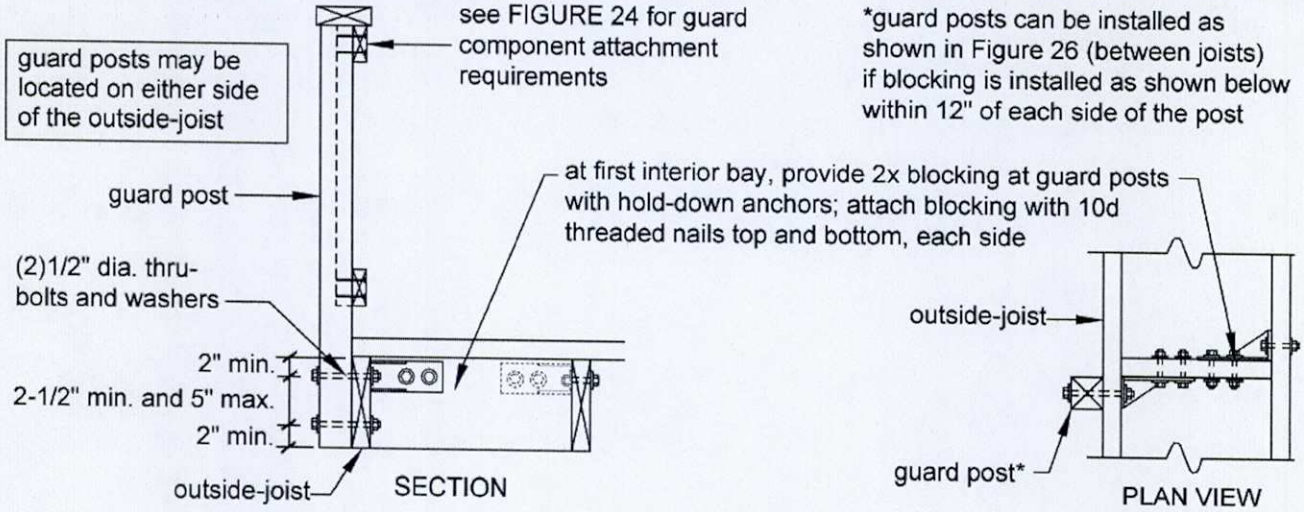

Figure 26. Guard Post to Rim Joist Example

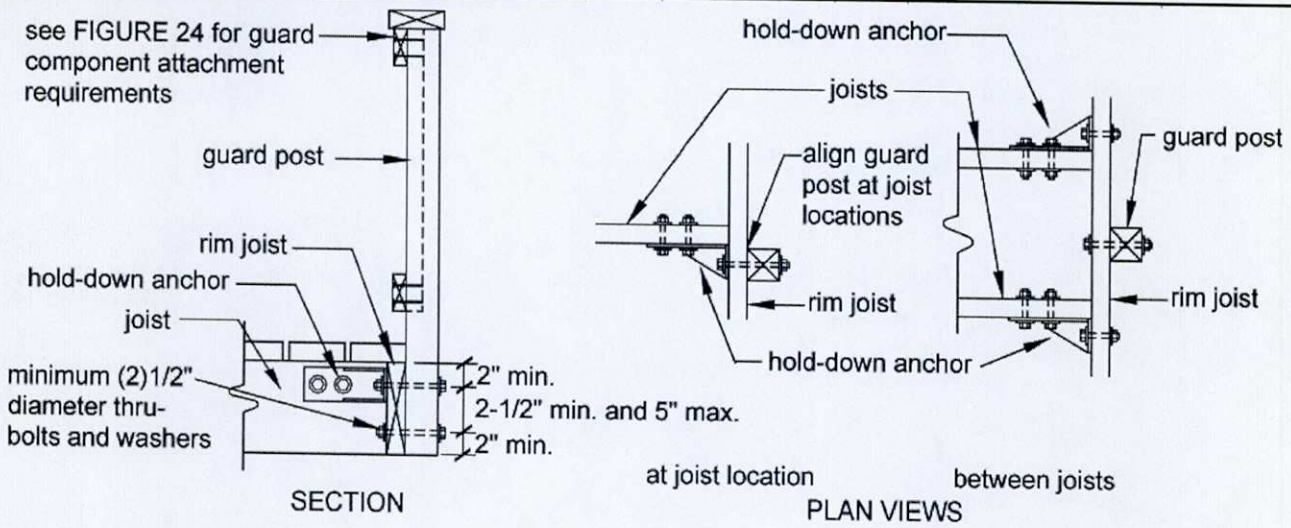

SMUCKER BROS CONSTRUCTION LLC

1330 SHEEP HILL RD EAST EARL PA 17519

DECK CONTRACT

CUSTOMER

MICHAEL FOY
3413 ALYDAR RD
DOWINGTOWN PA

DATE

01/30/14

THIS AGREEMENT, MADE THIS, BY AND BETWEEN HEREINAFTER CALLED THE CONTRACTOR AND HEREINAFTER CALLED THE OWNER WITNESSETH THAT THE CONTRACTOR AND THE OWNER AGREE AS FOLLOWS;

SCOPE OF WORK

OVERVEIW

BUILD PRESSURE TREATED DECK 16X20 w/ONE 4' OF STEPS TO GRADE (build as per drawings) I will provide drawings.

DEMOLITION

REMOVE RAILING BY PATIO DOOR

REMOVE ALL DEBRIS FROM SITE

FOOTERS

16X16X12 CONCRETE FOOTERS 36" DEEP INSTALLED 8' O.C.

MATERIALS USED
6X6 P/T POST SET ON CONCRETE FOOTERS
2-2X10 P/T BEAMS ATT.TO 6X6 POST W/BOLTS
2X10 P/T LEDGER BEAM ATT. TO HOUSE W/1/2 LAGS 16" O.C.
2X10 P/T JOIST 16" O.C. W/JOIST HANGERS WHERE ATT. TO LEDGER BEAM
2X12 P/T STAIR STRINGERS CUSTOM CUT TO FIT

DECKING AND RAILINGS
5/4X6X20 Pressure Treated #1 decking screwed to joist w/ ext. deck screws

2x4 Pressure Treated #1 used for top & bottom railings
¾ x ¾ Black Alum. Spindles installed 4" o.c. with

SPECIAL FEATURES
Install low voltage wire in top railing of all rail section, drill hole in 4x4 post on top to fit the wire,

Extend deck and extra 2 ft. by 6 ft. wide on deck to fit grill.

THE OWNER AGREES TO PAY THE CONTRACTOR FOR MATERIALS AND LABOR THE TOTAL SUM OF =8,750.00

10% DOWNPAYMENT
30% START OF CONSTRUCTION
50% WHEN BUILDING IS COMPLETE
10% WITHIN 15 DAYS OF COMPLETION

GENERAL PROVISIONS

1. ALL DEBRIS SHALL BE REMOVED BY CONTRACTOR
2. OWNER WILL PROVIDE WATER AND ELECTRIC DURING JOB
3. CONTRACTOR WILL APPLY FOR PERMIT(OWNER TO COVER ALL FEES)
4. CONTRACTOR IS DULY LICENSED TO COMPLETE WORK
5. CONTRACTOR WILL WARRANT ALL WORMANSHIP FOR 24 MONTHS

IF OWNER DESIRES ANY CHANGES TO WORK DESCRIBED HEREIN, CONTRACTOR IS ONLY OBLIGATED TO COMPLY IF A CHANGE ORDER STATING THE CHANGES IS SIGHED.

OTHER TERMS

SIGHED THIS 20th DAY OF Feb. 2013

CONTRACTOR

OWNER

Caln Township
Caln Twp. Municipal Authority
253 Municipal Drive
Thorndale,PA 19372

RECEIVED
MAR 21 2014
CALN TWP.

PAID
MAR 21 2014
CODES

INVOICE #
14-00096

INVOICE DATE: 03/21/14
DUE DATE: 04/20/14

ACCOUNT ID: SMUCKER1

SMUCKER BROTHERS CONSTRUCTION
1330 SHEEP HILL RD
EAST EARL, PA 17519

PERMIT INFORMATION
PERMIT NO: 14-00126
LOCATION: 3413 ALYDAR RD

QUANTITY/UNIT	SERVICE ID	DESCRIPTION	UNIT PRICE	AMOUNT
		Permit No: 14-00126		
1.0000	RC-DECK	DECK MINIMUM Permit No: 14-00126	100.00000	100.00
			TOTAL DUE:	$ 100.00

PAYMENT COUPON - PLEASE DETACH AND RETURN THIS PORTION ALONG WITH YOUR PAYMENT

Caln Township
Caln Twp. Municipal Authority
253 Municipal Drive
Thorndale,PA 19372

INVOICE #: 14-00096
DESCRIPTION: Permit No: 14-00126
ACCOUNT ID: SMUCKER1
DUE DATE: 04/20/14
TOTAL DUE: $ 100.00

SMUCKER BROTHERS CONSTRUCTION
1330 SHEEP HILL RD
EAST EARL, PA 17519

PLEASE PRINT
COMPLETE SECTION
1 and 2 or
1 and 3
(notarization required when claiming exemption)

For Completion by Municipal Officer
Municipality – CALN TOWNSHIP
PERMIT NO. 14-00126
DATE Issued 3-28-14

1. The applicant for the building permit, in compliance with Act 44 of 1993, hereby submits (check one):
   ✓ Certificate of Insurance (please attach)
   _____ Certificate of Self-Insurance (please attach)
   _____ Affidavit of Exemption

2. If a Certificate of Insurance or Self-Insurance has been submitted, please complete the following:

Name of Insurer Or Self-Insurer Mutual Benefit Ins. Co.
Address _____
City _____ State _____ Zip _____
Policy No. _____ Coverage Period Ends _____

Name of Contractor/Policyholder Smucker Bros. Construction LLC
Address _____
City _____ State _____ Zip _____
Contractor/Policyholder's federal or state employer identification number (EIN) _____

1. This policy provides coverage for the requirements of the Workers' Compensation Act, the Occupational Disease Act, and, where applicable, the federal Longshore and Harbor Workers' Compensation Act.
2. The insurer has been notified that the municipality issuing the buildin permit is to be named a policy certificate holder.
3. Any subcontractors used on this project will be required to carry their own workers' compensation coverage.
4. The contractor/policy holder will notify the municipality of any change in status, cancellation or expiration of workers' compensation coverage.
5. Violation of the Workers' Compensation Act or the terms of this permit will subject the contractor/policy holder to a stop-work order and other fines and penalties as provided by law.

3. If an exemption is being claimed, please complete the following and sign in the presence of a notary public: Basis for exemption (check one)

_____ Applicant is an individual who owns the property.

_____ Contractor/Applicant is a sole proprietorship without employees.

_____ Contractor/Applicant is a corporation and the only employees working on the project have and are qualified as "Executive Employee" under Section 104 of the Worker's Compensation Act. Please explain.

_____

_____

_____ All of the contractor/applicant's employees on the project are exempt on religious grounds under Section 304.2 of the Workers' Compensation Act. Please explain.

_____

_____

ACORD®

CERTIFICATE OF LIABILITY INSURANCE

DATE (MM/DD/YYYY) 3/21/2014

THIS CERTIFICATE IS ISSUED AS A MATTER OF INFORMATION ONLY AND CONFERS NO RIGHTS UPON THE CERTIFICATE HOLDER. THIS CERTIFICATE DOES NOT AFFIRMATIVELY OR NEGATIVELY AMEND, EXTEND OR ALTER THE COVERAGE AFFORDED BY THE POLICIES BELOW. THIS CERTIFICATE OF INSURANCE DOES NOT CONSTITUTE A CONTRACT BETWEEN THE ISSUING INSURER(S), AUTHORIZED REPRESENTATIVE OR PRODUCER, AND THE CERTIFICATE HOLDER.

IMPORTANT: If the certificate holder is an ADDITIONAL INSURED, the policy(ies) must be endorsed. If SUBROGATION IS WAIVED, subject to the terms and conditions of the policy, certain policies may require an endorsement. A statement on this certificate does not confer rights to the certificate holder in lieu of such endorsement(s).

PRODUCER
Avis Insurance
3399 Jetstar Drive
Lititz PA 17543

CONTACT NAME: Madeleine Vedejs
PHONE (A/C, No, Ext): (717) 625-3770 FAX (A/C, No): (717) 625-3777
E-MAIL ADDRESS: mvedejs@avisinsurance.com

INSURER(S) AFFORDING COVERAGE	NAIC #
INSURER A: Mutual Benefit Insurance Co	14664
INSURER B:	
INSURER C:	
INSURER D:	
INSURER E:	
INSURER F:	

INSURED
Smucker Brothers Construction, LLC
1330 Sheep Hill Road
East Earl PA 17519

COVERAGES CERTIFICATE NUMBER: 2013-2014 REVISION NUMBER:

THIS IS TO CERTIFY THAT THE POLICIES OF INSURANCE LISTED BELOW HAVE BEEN ISSUED TO THE INSURED NAMED ABOVE FOR THE POLICY PERIOD INDICATED. NOTWITHSTANDING ANY REQUIREMENT, TERM OR CONDITION OF ANY CONTRACT OR OTHER DOCUMENT WITH RESPECT TO WHICH THIS CERTIFICATE MAY BE ISSUED OR MAY PERTAIN, THE INSURANCE AFFORDED BY THE POLICIES DESCRIBED HEREIN IS SUBJECT TO ALL THE TERMS, EXCLUSIONS AND CONDITIONS OF SUCH POLICIES. LIMITS SHOWN MAY HAVE BEEN REDUCED BY PAID CLAIMS.

INSR LTR	TYPE OF INSURANCE	ADDL INSR	SUBR WVD	POLICY NUMBER	POLICY EFF (MM/DD/YYYY)	POLICY EXP (MM/DD/YYYY)	LIMITS	
A	GENERAL LIABILITY X COMMERCIAL GENERAL LIABILITY CLAIMS-MADE X OCCUR GEN'L AGGREGATE LIMIT APPLIES PER: POLICY X PRO-JECT LOC			AC925276	12/7/2013	12/7/2014	EACH OCCURRENCE	$ 1,000,000
							DAMAGE TO RENTED PREMISES (Ea occurrence)	$ 100,000
							MED EXP (Any one person)	$ 10,000
							PERSONAL & ADV INJURY	$ 1,000,000
							GENERAL AGGREGATE	$ 2,000,000
							PRODUCTS - COMP/OP AGG	$ 2,000,000
								$
A	AUTOMOBILE LIABILITY ANY AUTO ALL OWNED AUTOS X SCHEDULED AUTOS X HIRED AUTOS X NON-OWNED AUTOS			BA925276	12/7/2013	12/7/2014	COMBINED SINGLE LIMIT (Ea accident)	$ 1,000,000
							BODILY INJURY (Per person)	$
							BODILY INJURY (Per accident)	$
							PROPERTY DAMAGE (Per accident)	$
							Uninsured motorist combined	$ 35,000
A	X UMBRELLA LIAB X OCCUR EXCESS LIAB CLAIMS-MADE DED RETENTION $ 10,000			UL925276	12/7/2013	12/7/2014	EACH OCCURRENCE	$ 1,000,000
							AGGREGATE	$
								$
A	WORKERS COMPENSATION AND EMPLOYERS' LIABILITY ANY PROPRIETOR/PARTNER/EXECUTIVE OFFICER/MEMBER EXCLUDED? Y/N (Mandatory in NH) If yes, describe under DESCRIPTION OF OPERATIONS below	N/A		WC925276	12/7/2013	12/7/2014	X WC STATU-TORY LIMITS OTH-ER	
							E.L. EACH ACCIDENT	$ 100,000
							E.L. DISEASE - EA EMPLOYEE	$ 100,000
							E.L. DISEASE - POLICY LIMIT	$ 500,000

DESCRIPTION OF OPERATIONS / LOCATIONS / VEHICLES (Attach ACORD 101, Additional Remarks Schedule, if more space is required)

CERTIFICATE HOLDER

(610) 384-0617

Caln Township
253 Municipal Drive
Thorndale, PA 19372

CANCELLATION

SHOULD ANY OF THE ABOVE DESCRIBED POLICIES BE CANCELLED BEFORE THE EXPIRATION DATE THEREOF, NOTICE WILL BE DELIVERED IN ACCORDANCE WITH THE POLICY PROVISIONS.

AUTHORIZED REPRESENTATIVE

M Gunzenhauser/HMILLR

© 1988-2010 ACORD CORPORATION. All rights reserved.
The ACORD name and logo are registered marks of ACORD

PLEASE PRINT
COMPLETE SECTION
1 and 2 or
1 and 3
(notarization required when claiming exemption)

For Completion by Municipal Officer
Municipality – CALN TOWNSHIP
PERMIT NO. 14-00126
DATE Issued 3-28-14

1. The applicant for the building permit, in compliance with Act 44 of 1993, hereby submits (check one):
   ✓ Certificate of Insurance (please attach)
   _____ Certificate of Self-Insurance (please attach)
   _____ Affidavit of Exemption

2. If a Certificate of Insurance or Self-Insurance has been submitted, please complete the following:

Name of Insurer Or Self-Insurer Mutual Benefit Ins. Co.
Address
City State Zip
Policy No. Coverage Period Ends

Name of Contractor/Policyholder Smucker Bros. Construction LLC
Address
City State Zip
Contractor/Policyholder's federal or state employer identification number (EIN)

1. This policy provides coverage for the requirements of the Workers' Compensation Act, the Occupational Disease Act, and, where applicable, the federal Longshore and Harbor Workers' Compensation Act.
2. The insurer has been notified that the municipality issuing the buildin permit is to be named a policy certificate holder.
3. Any subcontractors used on this project will be required to carry their own workers' compensation coverage.
4. The contractor/policy holder will notify the municipality of any change in status, cancellation or expiration of workers' compensation coverage.
5. Violation of the Workers' Compensation Act or the terms of this permit will subject the contractor/policy holder to a stop-work order and other fines and penalties as provided by law.

3. If an exemption is being claimed, please complete the following and sign in the presence of a notary public: Basis for exemption (check one)

_____ Applicant is an individual who owns the property.

_____ Contractor/Applicant is a sole proprietorship without employees.

_____ Contractor/Applicant is a corporation and the only employees working on the project have and are qualified as "Executive Employee" under Section 104 of the Worker's Compensation Act. Please explain.

_____ All of the contractor/applicant's employees on the project are exempt on religious grounds under Section 304.2 of the Workers' Compensation Act. Please explain.

ACORD®

CERTIFICATE OF LIABILITY INSURANCE

DATE (MM/DD/YYYY) 3/21/2014

THIS CERTIFICATE IS ISSUED AS A MATTER OF INFORMATION ONLY AND CONFERS NO RIGHTS UPON THE CERTIFICATE HOLDER. THIS CERTIFICATE DOES NOT AFFIRMATIVELY OR NEGATIVELY AMEND, EXTEND OR ALTER THE COVERAGE AFFORDED BY THE POLICIES BELOW. THIS CERTIFICATE OF INSURANCE DOES NOT CONSTITUTE A CONTRACT BETWEEN THE ISSUING INSURER(S), AUTHORIZED REPRESENTATIVE OR PRODUCER, AND THE CERTIFICATE HOLDER.

IMPORTANT: If the certificate holder is an ADDITIONAL INSURED, the policy(ies) must be endorsed. If SUBROGATION IS WAIVED, subject to the terms and conditions of the policy, certain policies may require an endorsement. A statement on this certificate does not confer rights to the certificate holder in lieu of such endorsement(s).

PRODUCER
Avis Insurance
3399 Jetstar Drive
Lititz PA 17543

CONTACT NAME: Madeleine Vedejs
PHONE (A/C, No, Ext): (717) 625-3770 FAX (A/C, No): (717) 625-3777
E-MAIL ADDRESS: mvedejs@avisinsurance.com

INSURER(S) AFFORDING COVERAGE	NAIC #
INSURER A: Mutual Benefit Insurance Co	14664
INSURER B:	
INSURER C:	
INSURER D:	
INSURER E:	
INSURER F:	

INSURED
Smucker Brothers Construction, LLC
1330 Sheep Hill Road
East Earl PA 17519

COVERAGES CERTIFICATE NUMBER: 2013-2014 REVISION NUMBER:

THIS IS TO CERTIFY THAT THE POLICIES OF INSURANCE LISTED BELOW HAVE BEEN ISSUED TO THE INSURED NAMED ABOVE FOR THE POLICY PERIOD INDICATED. NOTWITHSTANDING ANY REQUIREMENT, TERM OR CONDITION OF ANY CONTRACT OR OTHER DOCUMENT WITH RESPECT TO WHICH THIS CERTIFICATE MAY BE ISSUED OR MAY PERTAIN, THE INSURANCE AFFORDED BY THE POLICIES DESCRIBED HEREIN IS SUBJECT TO ALL THE TERMS, EXCLUSIONS AND CONDITIONS OF SUCH POLICIES. LIMITS SHOWN MAY HAVE BEEN REDUCED BY PAID CLAIMS.

INSR LTR	TYPE OF INSURANCE	ADDL INSR	SUBR WVD	POLICY NUMBER	POLICY EFF (MM/DD/YYYY)	POLICY EXP (MM/DD/YYYY)	LIMITS	
A	GENERAL LIABILITY X COMMERCIAL GENERAL LIABILITY CLAIMS-MADE X OCCUR GEN'L AGGREGATE LIMIT APPLIES PER: POLICY X PRO-JECT LOC			AC925276	12/7/2013	12/7/2014	EACH OCCURRENCE	$ 1,000,000
							DAMAGE TO RENTED PREMISES (Ea occurrence)	$ 100,000
							MED EXP (Any one person)	$ 10,000
							PERSONAL & ADV INJURY	$ 1,000,000
							GENERAL AGGREGATE	$ 2,000,000
							PRODUCTS - COMP/OP AGG	$ 2,000,000
								$
A	AUTOMOBILE LIABILITY ANY AUTO ALL OWNED AUTOS X SCHEDULED AUTOS X HIRED AUTOS X NON-OWNED AUTOS			BA925276	12/7/2013	12/7/2014	COMBINED SINGLE LIMIT (Ea accident)	$ 1,000,000
							BODILY INJURY (Per person)	$
							BODILY INJURY (Per accident)	$
							PROPERTY DAMAGE (Per accident)	$
							Uninsured motorist combined	$ 35,000
A	X UMBRELLA LIAB X OCCUR EXCESS LIAB CLAIMS-MADE DED RETENTION $ 10,000			UL925276	12/7/2013	12/7/2014	EACH OCCURRENCE	$ 1,000,000
							AGGREGATE	$
								$
A	WORKERS COMPENSATION AND EMPLOYERS' LIABILITY ANY PROPRIETOR/PARTNER/EXECUTIVE OFFICER/MEMBER EXCLUDED? Y/N (Mandatory in NH) If yes, describe under DESCRIPTION OF OPERATIONS below		N/A	WC925276	12/7/2013	12/7/2014	X WC STATU-TORY LIMITS OTH-ER	
							E.L. EACH ACCIDENT	$ 100,000
							E.L. DISEASE - EA EMPLOYEE	$ 100,000
							E.L. DISEASE - POLICY LIMIT	$ 500,000

DESCRIPTION OF OPERATIONS / LOCATIONS / VEHICLES (Attach ACORD 101, Additional Remarks Schedule, if more space is required)

CERTIFICATE HOLDER

(610) 384-0617

Caln Township
253 Municipal Drive
Thorndale, PA 19372

CANCELLATION

SHOULD ANY OF THE ABOVE DESCRIBED POLICIES BE CANCELLED BEFORE THE EXPIRATION DATE THEREOF, NOTICE WILL BE DELIVERED IN ACCORDANCE WITH THE POLICY PROVISIONS.

AUTHORIZED REPRESENTATIVE

M Gunzenhauser/HMILLR

© 1988-2010 ACORD CORPORATION. All rights reserved.
The ACORD name and logo are registered marks of ACORD

TOWNSHIP OF CALN
253 MUNICIPAL DR
THORNDALE, PA. 19372
610/384-0400

CERTIFICATE OF OCCUPANCY

Building Permit No. 2007-00513-BUI

UCC Certificate of Occupancy No. 7691

REMARKS

Zoning District R3

Permission is hereby given:

MUNDY, JOSHUA
(owner of use)

MUNDY, JOSHUA
owner (new)

FENCE SENSE
contractor

Use Type: FENCE -IN ACCORDANCE WITH THE APPROVED VARIANCE GRANTED BY THE ZONING LOT #58 BAILEY STATION
(Lot & Development)

At: 3372 ALYDAR RD, DOWNINGTOWN, PA 19335

For: RESIDENTIAL ACCESSORY STRUCTURE - FENCE

Joseph Arway 9-8-08 — Anne Byh 9/8/08

Building Code Official **DATE** — **Zoning Officer** **DATE**

IN COMPLIANCE WITH 2006 IBC CODE

APPROVED AS TO COMPLIANCE WITH ZONING ORDINANCE.

TOWNSHIP OF CALN
253 MUNICIPAL DR
THORNDALE, PA. 19372
610/384-0600 X 119

24 hrs. notice required for inspection scheduling

INSPECTION ASSIGNMENT SHEET

Building Permit No. 2007-00513-BUI

Location 3372 ALYDAR RD, DOWNINGTOWN, PA 19335

Owner MUNDY, JOSHUA

Contractor FENCE SENSE (484-576-7935)

Description FENCE -IN ACCORDANCE WITH THE APPROVED VARIANCE GRANTED

Comments IN ACCORDANCE WITH THE APPROVED VARIANCE GRANTED BY THE ZONING HEARING BOARD ON MARCH 6, 2008. SEE COPY OF PERMIT REVIEW LETTER ATTACHED.

SITE INSPECTION PRIOR TO BEGINNING CONSTRUCTION

FORM INSPECTION PRIOR TO POURING FOOTERS

ROUGH FRAMING INSPECTION PRIOR TO INSULATION OR INTERIOR COVERING (rough elec

FINAL INSPECTION (performed after work is complete and PRIOR TO USING OR OCCUPYING CO

9-5-08 fence installed as per specs

3 split rail fence w/ green vinyl wire fence on the inside

48" high

JA

CALN TOWNSHIP

DEPARTMENT OF CODE ENFORCEMENT

Andrew F. Reczek, Director of Code Enforcement
Stephen L. Miller, Code Official / Fire Marshal
Raymond Stackhouse, Code Official / Deputy Fire Marshal
Joseph Arvay, Code Official / Housing Inspector

www.caintownship.org

610-384-0400 fax: 610-384-0689 Email: andyr@caintownship.org
253 Municipal Drive, P.O. Box 72149 Thorndale, Pa. 19372-0149

March 7, 2008

Joshua Mundy and Perry Ratcliffe
3372 Alydar Road
Downingtown, PA 19335

PERMIT REVIEW: Side & Rear Yard Fencing

1. **All fencing located in a side or rear yard shall not exceed six (6) foot in overall height. All structural members shall face the property being enclosed.**

2. **It is the property owner's responsibility to provide locations of the deeded property corners to assure all structures are installed completely within these property lines and to further verify all structures meet the setback dimensions of the zoning district. If these locations cannot be established, a property survey will be required prior to installation in accordance with Section 155-115 C of the Caln Township Zoning Code**

3. Fencing located in areas considered "very steep" was approved through the variance process by the Caln Township Zoning Hearing Board on March 6th, 2008.

4. Any Contractor performing work shall be registered in Caln Township

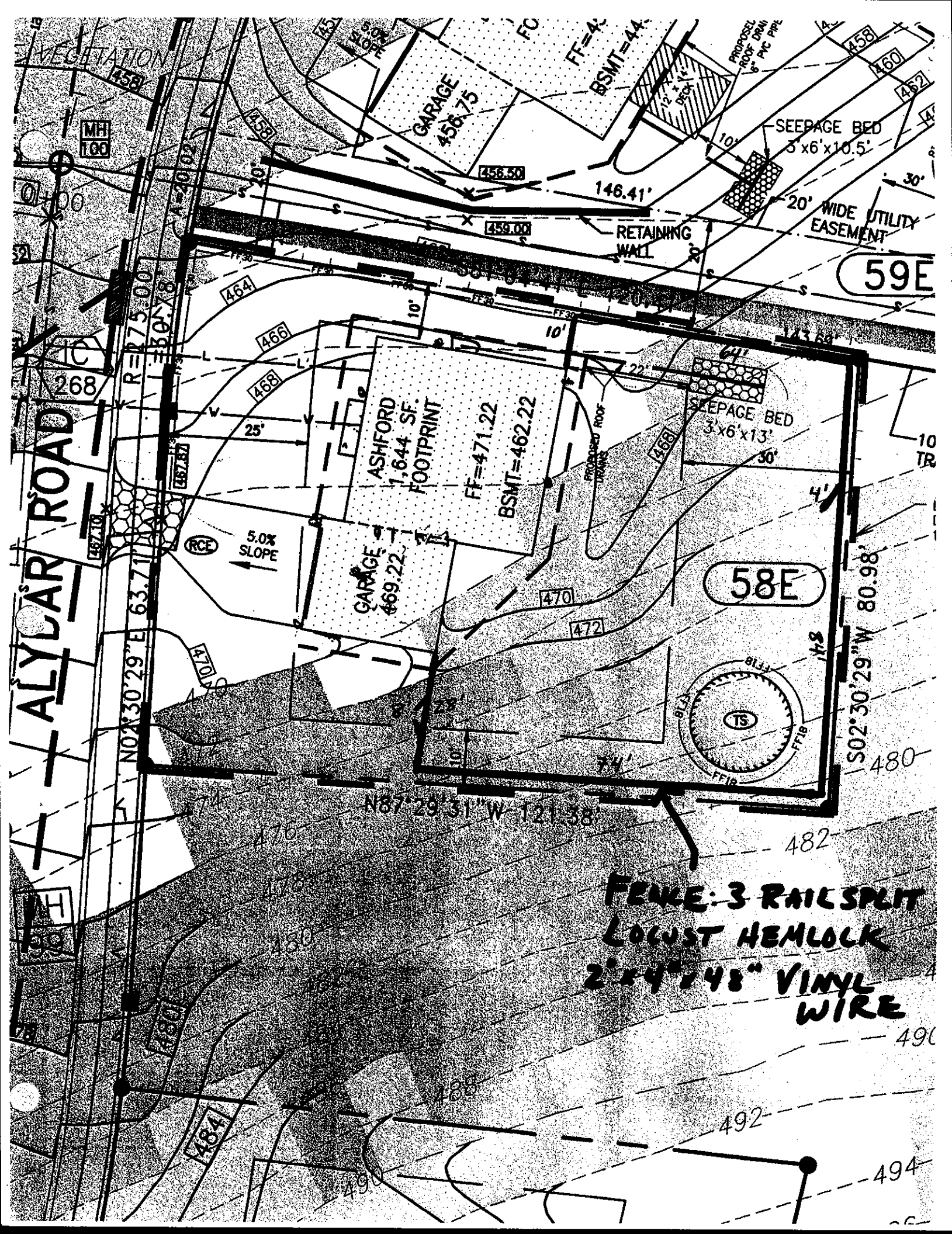

VEGETATION
GARAGE 456.75
BSMT=44
SEEPAGE BED 3'x6'x10.5'
20' WIDE UTILITY EASEMENT
RETAINING WALL
146.41'
456.50
459.00
59E
58E
ASHFORD 1,644 SF. FOOTPRINT
FF=471.22
BSMT=462.22
GARAGE 469.22
5.0% SLOPE
RCE
SEEPAGE BED 3'x6'x13'
PROPOSED ROOF DRAINS
ALYDAR ROAD
N02°30'29"E 63.71'
S02°30'29"W 80.98'
N87°29'31"W 121.38'
FENCE: 3 RAILSPLIT LOCUST HEMLOCK 2"x4"x48" VINYL WIRE

dan eldredge fencing

610-430-0743

Fax: 610-857-9253
898 Fernhill Road #10
West Chester, PA 19380

NAME Perry Josh Ratcliffe	DATE 10/16/07
ADDRESS 3372 Applar Road	HOME PHONE
CITY, STATE, ZIP Downingtown, PA 19335	WORK ~~PHONE~~ cell 610-506-7035
GRID AND NEAREST CROSS ROAD 3580 K2 X W. Embreeville Rd.	CELL PHONE 610-918-1913

Install 270' of 3 Rail split Rail w/ 2"x 4"x48" Green or Black Vinyl wire including one (1) 8' DBL. Gate, and one (1) 4' Sgl. Gate. Gateposts are set in concrete.

Pressure treated $3292.00
Locust Hemlock $3089.00

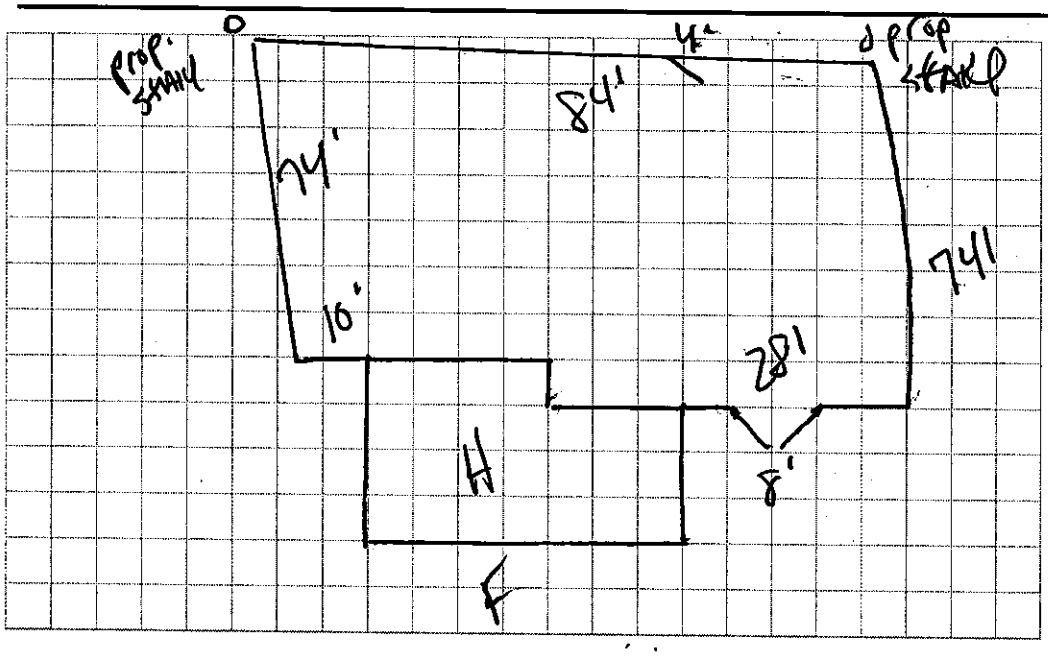

For difficult digging, roots or rocks, cost is $35.00 per hole.

- Estimated lead time 3-4 week(s).
- Terms: 50% deposit, balance due day of completion. (10% late fee will be charged for all accounts 10 days past due)
- You can expect to receive a call several days in advance to schedule the installation. You will be expected to be onsite at the beginning and at the completion of the job.
- Any changes made to signed contract or delays caused by customer may incur additional charges, including but not limited to an extra trip fee of $200
- Price is valid for completion of all work listed at the same time.
- Encountering rock or unsuitable soil over and above normal conditions will incur additional costs to this proposal.
- You are responsible to locate and establish property lines & private utilities, obtain any necessary permits and comply with local ordinances.
- We will call to have public utilities located and marked.
- Dan Eldredge Fencing is not responsible for any damage to underground utilities, fixtures, etc. whether marked or unmarked.
- Estimate is good for 30 days from date issued.

Should you wish to have this work scheduled, simply sign below and send a copy along with the deposit to the above address.

SIGNATURE _____ DATE _____ Dan Eldredge DAN ELDREDGE FENCING

Thank you for the opportunity to present this proposal to you. We, at **Dan Eldredge Fencing**, are committed to providing top quality service in the fencing industry. All of our work will be performed in a professional and gentlemanly manner.

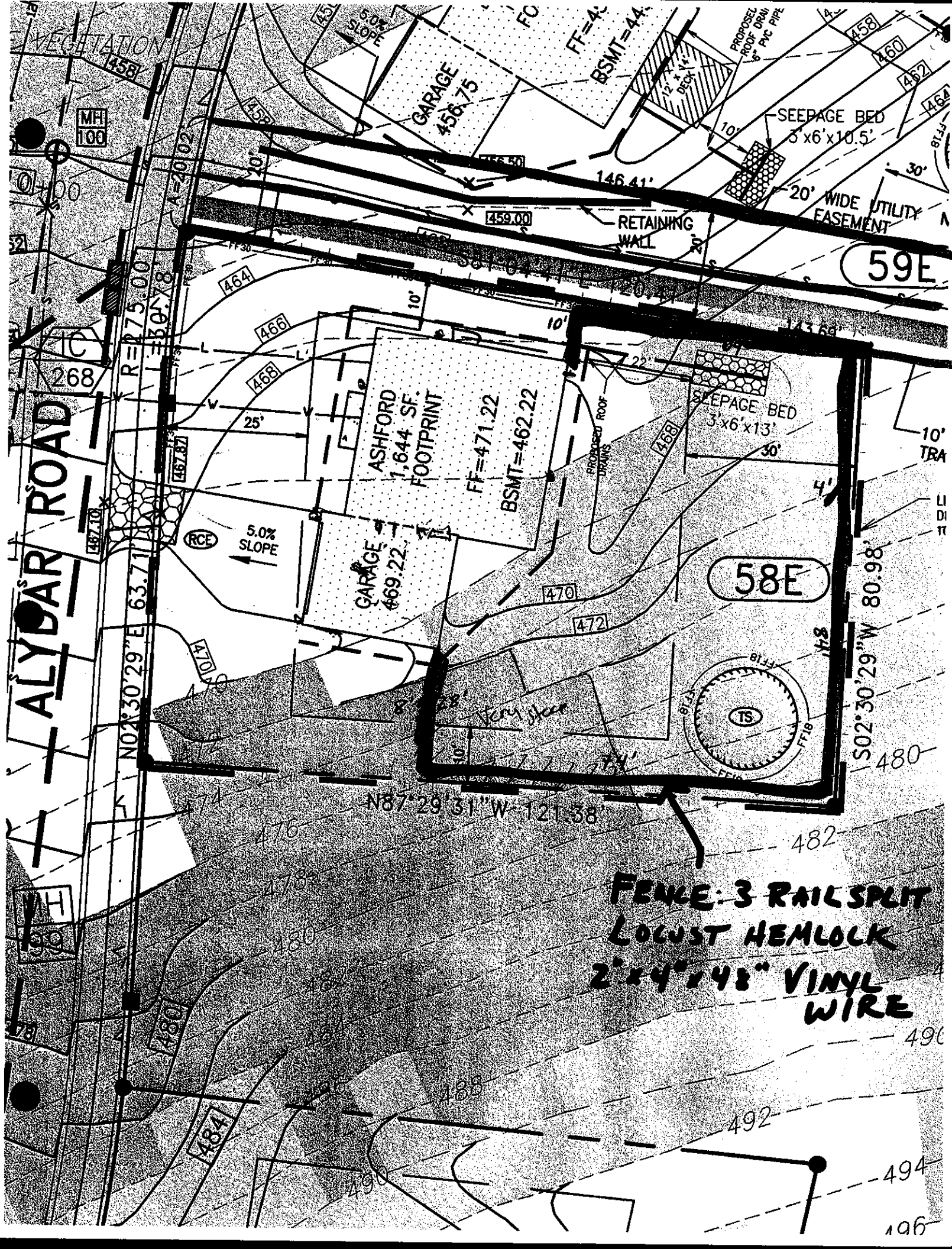

VEGETATION
GARAGE 456.75
BSMT=44
SEEPAGE BED 3'x6'x10.5'
20' WIDE UTILITY EASEMENT
RETAINING WALL
146.41'
459.00
59E
ASHFORD 1,644 SF. FOOTPRINT
FF=471.22
BSMT=462.22
GARAGE 469.22
5.0% SLOPE
SEEPAGE BED 3'x6'x13'
PROPOSED ROOF DRAINS
58E
ALYDAR ROAD
N02°30'29"E 63.71'
S02°30'29"W 80.98'
N87°29'31"W 121.38'
Very steep
FENCE: 3 RAILSPLIT
LOCUST HEMLOCK
2"x4"x48" VINYL
WIRE

Caln Township
253 Municipal Drive, Thorndale, PA 19372
610/384-0600, Fax 610/384-0689
ZONING PERMIT APPLICATION – PERMIT FEES ARE NON-REFUNDABLE.

Address 3372 Alydar Road Downingtown, PA 19335 **Subdivision** NorthGate at Bailey Station **Lot #** 58 **Zoning Dist.** R-3

IDENTIFICATION – To be completed by all applicants
OWNER and/or TENANT
Name: Joshua Mundy & Perry E. Ratcliffe
Address: 3372 Alydar Road
Downingtown, PA 19335
Phone #:

Contractor Information:
Name: Dan Eldredge Fencing
Address: 898 Fernhill Road - Unit 10
West Chester, PA 19380
Phone #: 610-430-0743

ZONING PERMITS

Fence/Wall ☑ Shed ☐
Forestry Grading ☐ Sign ☐

Minimum fee due at time of permit application.

DATE: 12/07 or 1/08
JOB COST: approx $3,000

SIGNS
Wall ☐ Special Event ☐
Freestanding ☐ Grand Opening ☐
Banner ☐

Signs illuminated ☐ yes ☐ no
Existing Signs
Size of ea. Sign
Type of Signs
Bldg. Dimensions
Wall Frontage

WALL Type: Hgt.
(less than 4' in height)

No wall shall be erected within a floodway, street right-of-way, utility easement, drainage or sewer easement. Please show all easements that exist on your property.

Show location of wall in relation to structures.
Walls erected within the require front yard shall not exceed three (3) feet in height

SHEDS (Less than 1000 Sq. Ft.) ☐

Size of Shed

Type of Shed
Wood ☐
Metal ☐

Type of foundation
Concrete Blocks ☐
Gravel Bed ☐
Concrete Slab ☐
Other ☐

FENCE Type: Post & Rail
Height: approx 4'

No fence shall be erected within a floodway, street right-of-way, utility easement, drainage or sewer easement. Please show all easements that exist on your property.

Show location of fence in relation to structures.

Fences erected within the required front yard shall not exceed five (5) feet.

SIGNATURE OF APPLICANT [signature] DATE: 11/19/07

DO NOT WRITE IN THIS SPACE – FOR OFFICE USE ONLY

Permit # 513 | Approved By: [signature] | Permit Fee: 55.00 | Date Issued: 3/7/08

REMARKS: In accordance with the approved variance granted by the Zoning Hearing Board on March 6th 2008.

TOWNSHIP OF CALN

PERMIT

Permit No: 2007-00513-BUI

Date Issued: 3/13/2008

Location of Work: 3372 ALYDAR RD

Type of Work: FENCE -IN ACCORDANCE WITH THE APPROVED VARIANCE GRANTED BY THE ZONING HEARING BOARD ON MARCH 6, 2008. SEE COPY OF PERMIT REVIEW LETTER ATTACHED.

Owner: MUNDY, JOSHUA

Contractor: FENCE SENSE

Parcel #:

ZONING OFFICER

THIS PLACARD MUST BE POSTED IN A CONSPICUOUS PLACE ON THE PREMISES, EASILY VISIBLE FROM THE PRINCIPAL STREET, WELL SECURED IF EXPOSED TO THE WEATHER, DURING THE ENTIRE CONSTRUCTION TIME.

WORK MUST BE STARTEDWITHIN 6 MONTHS FROM DATE OF ISSUE

Date 11-21-07

Township of Caln
Receipt and Proof of Payment

№ 17299 1189

GENERAL FUND

$55

01-10-322-910 --- Police Services
01-10-322-900 --- Street Opening Fee
01-10-331-125 --- Vehicle/Speed Ctrl/Ordinance
01-10-345-060 --- Act 205 - Pension
01-10-345-061 --- Fireman's Relief
01-10-345-080 --- Beverage License
01-10-361-305 --- Planning Fees
01-10-361-320 --- Act 247 Review/Inspection
01-10-361-340 --- Zoning Hearing
01-10-362-410 --- Building Permit $55.00
01-10-362-415 --- Fire Inspection
01-10-362-451 --- U & O New
01-10-362-452 --- U & O Res & Com
01-10-362-601 --- Housing Annual Rental Fee
01-10-362-602 --- Housing Tenant Change Fee
01-10-362-610 --- Contractor's License Fee
01-10-363-700 --- Bus Shelters
01-10-380-100 --- Miscellaneous
01-10-380-105 --- Tax Certification Fees
01-10-380-110 --- Cell Tower Fees
01-10-387-303 --- Lloyd Park Investment
01-10-387-305 --- Parks/Trips Reservations
01-10-387-307 --- Tennis Court Fee
01-_____ ---
01-_____ ---
01-_____ ---
01-_____ ---
01-_____ ---

3372 Alydar

PAID
NOV 21 2007
CODES

Department JB Treasurer

CALN TOWNSHIP

Department of Code Enforcement

Andrew F. Reczek, Director of Code Enforcement
Stephen L.Miller, Code Official/Fire Marshal
Raymond Stackhouse, Code Official/Deputy Fire Marshal
Joseph Arvay, Property Maintenance/Housing Inspector
610-384-0600 fax: 610-384-0689 Email: andyr@caintownship.org
253 Municipal Drive, P.O. Box 72149 Thorndale, Pa. 19372-0149

www.caintownship.org

PROTOCOL FOR ZONING PERMIT SUBMITTAL

1. **The Zoning Officer has thirty (30) days to review applications.**
2. **Two set of plans must accompany submitted application with cross sections and details.**
3. **Provide plot plan showing all existing & proposed construction. No application will be accepted without the above information. Provide setback dimensions from any structure (new or existing) or paved surface to all property lines.**
4. **The minimum fee will be collected at time of application. Caln Township Code Official will calculate total fee. Any additional fees will be collected prior to issuance of Permit. Fee schedule is available on line @ www.caintownship.org.**
5. **Forestry applications – No permit required for up to four (4) trees per acre.**
6. **Forestry applications – Please provide two (2) detailed plot plans showing extent of forestry/grading. Plot plan must show property dimensions as well as all structures (if any) located on same with distances to property line. The applicant must also show limits of disturbances as it pertains to existing structures. Locate all easements, swales, berms, etc. that exist on the property and indicate location of erosion and sedimentation control measures to be used.**
7. **Walls (under 4' in height) only require a zoning permit.**
8. **Sign permit shall include plot plan. Building dimension with size & location of all new and existing signs.**
9. **Caln Township reserves the right to reject any permit application that does not comply with above referenced requirements.**

SIGNATURE OF APPLICANT _____

DATE: 11/19/07

CALN TOWNSHIP

Department of Code Enforcement

Andrew F. Reczek, Director of Code Enforcement
Stephen L.Miller, Code Official/Fire Marshal
Raymond Stackhouse, Code Official/Deputy Fire Marshal
Joseph Arvay, Property Maintenance/Housing Inspector
610-384-0600 fax: 610-384-0689 Email: andyr@calntownship.org
253 Municipal Drive, P.O. Box 72149 Thorndale, Pa. 19372-0149

www.calntownship.org

PROTOCOL FOR ZONING PERMIT SUBMITTAL

1. **The Zoning Officer has thirty (30) days to review applications.**
2. **Two set of plans must accompany submitted application with cross sections and details.**
3. **Provide plot plan showing all existing & proposed construction. No application will be accepted without the above information. Provide setback dimensions from any structure (new or existing) or paved surface to all property lines.**
4. **The minimum fee will be collected at time of application. Caln Township Code Official will calculate total fee. Any additional fees will be collected prior to issuance of Permit. Fee schedule is available on line @ www.calntownship.org.**
5. **Forestry applications – No permit required for up to four (4) trees per acre.**
6. **Forestry applications – Please provide two (2) detailed plot plans showing extent of forestry/grading. Plot plan must show property dimensions as well as all structures (if any) located on same with distances to property line. The applicant must also show limits of disturbances as it pertains to existing structures. Locate all easements, swales, berms, etc. that exist on the property and indicate location of erosion and sedimentation control measures to be used.**
7. **Walls (under 4' in height) only require a zoning permit.**
8. **Sign permit shall include plot plan. Building dimension with size & location of all new and existing signs.**
9. **Caln Township reserves the right to reject any permit application that does not comply with above referenced requirements.**

SIGNATURE OF APPLICANT _____

DATE: 11/19/07

Caln Township
253 Municipal Drive, Thorndale, PA 19372
610/384-0600, Fax 610/384-0689
ZONING PERMIT APPLICATION – PERMIT FEES ARE NON-REFUNDABLE.

Address 3372 Alydar Road Downingtown, PA 19335 **Subdivision** NorthGate at Bailey Station **Lot #** 58 **Zoning Dist.** R-3

IDENTIFICATION – To be completed by all applicants

OWNER and/or TENANT
Name: Joshua Mundy & Perry E. Ratcliffe
Address: 3372 Alydar Road
Downingtown, PA 19335
Phone #:

Contractor Information:
Name: Dan Eldredge Fencing
Address: 898 Fernhill Road - Unit 10
West Chester, PA 19380
Phone #: 610-430-0743

ZONING PERMITS

Fence/Wall ☑ Shed ☐
Forestry Grading ☐ Sign ☐

Minimum fee due at time of permit application.

DATE: 12/07 or 1/08 (12/14/07??)
JOB COST: approx $3,000

SIGNS
Wall ☐ Special Event ☐
Freestanding ☐ Grand Opening ☐
Banner ☐

Signs illuminated ☐ yes ☐ no
Existing Signs
Size of ea. Sign
Type of Signs
Bldg. Dimensions
Wall Frontage

Variance Required

SHEDS (Less than 1000 Sq. Ft.) ☐

Size of Shed

Type of Shed
Wood ☐
Metal ☐

Type of foundation
Concrete Blocks ☐
Gravel Bed ☐
Concrete Slab ☐
Other ☐

WALL **Type:** **Hgt.**
(less than 4' in height)

No wall shall be erected within a floodway, street right-of-way, utility easement, drainage or sewer easement. Please show all easements that exist on your property.

Show location of wall in relation to structures.
Walls erected within the require front yard shall not exceed three (3) feet in height

FENCE **Type:** Post & Rail
Height: approx 4'

No fence shall be erected within a floodway, street right-of-way, utility easement, drainage or sewer easement. Please show all easements that exist on your property.

Show location of fence in relation to structures.

Fences erected within the required front yard shall not exceed five (5) feet.

SIGNATURE OF APPLICANT [signature] DATE: 11/19/07

DO NOT WRITE IN THIS SPACE – FOR OFFICE USE ONLY

Permit #	Approved By:	Permit Fee:	Date Issued:

REMARKS: Fences are prohibited in areas of "Very Steep Slopes" in accordance with Section 155-36 G(3)

BEFORE THE ZONING HEARING BOARD
CALN TOWNSHIP
CHESTER COUNTY, PENNSYLVANIA

- - -

Public hearing held before the Caln Township Zoning Hearing Board to consider the application of JOSHUA MUNDY and PERRY RATCLIFFE.

Said hearing held at the Caln Township Municipal Building, 253 Municipal Drive, Thorndale, Pennsylvania, on March 6, 2008, beginning at 9:05 o'clock p.m.

- - -

BEFORE:

THOMAS C. HINKLE, Chairman

ANTHONY POLLINI, Member

SHERI PFLUGH, Member

APPEARANCES:

KRISTIN CAMP, ESQUIRE,
on behalf of the Board;

JOSHUA MUNDY
PERRY RATCLIFFE,
pro se.

William H. Handy
Official Court Reporter

ORIGINAL

EXCERPT OF PROCEEDINGS

(March 6, 2008, 9:05 p.m.)

THE CHAIRMAN: With that I'll entertain a motion that the Caln Township Zoning Hearing Board grants the variance application of Joshua Mundy and Perry Ratcliffe for the construction of a split rail fence in the very steep slopes on the property located at 3372 Alydar Road in the Northgate at Bailey Station Subdivision.

MS. PFLUGH: So moved.

MR. POLLINI: Second.

THE CHAIRMAN: Moved and seconded. All in favor?

(Unanimous decision.)

Thomas C. Hinkle, Chairman

Anthony Pollini, Member

Sheri Pflugh, Member

C E R T I F I C A T E

I, William H. Handy, Official Court Reporter for the Court of Common Pleas, Chester County, Pennsylvania, do hereby certify that the evidence and proceedings are contained fully and accurately in the notes taken by me at the preceding hearing, and that this transcript is a true and correct transcript of the same.

William H. Handy
Official Court Reporter

Date: 3/11/08

TOWNSHIP OF CALN
253 MUNICIPAL DR
THORNDALE, PA. 19372
610/384-0400

CERTIFICATE OF OCCUPANCY

Building Permit No. 2012-00128-BUI

UCC Certificate of Occupancy No. 9125

REMARKS

Zoning District R3

Permission is hereby given:

RICHARDSON, DALE S. & PHYLLIS V.
(owner of use)

DALE & PHYLLIS RICHARDSON
owner (new)

KING DECKS PA. LIC. #073330
contractor

Use Type: DECK

LOT #129 BAILEY STATION THE CROSSING
(Lot & Development)

At: 3317 ALYDAR RD, DOWNINGTOWN, PA 19335

For: RESIDENTIAL ACCESSORY STRUCTURE - DECK

8/7/12
Building Inspector DATE

8/7/2012
Zoning Officer/Building Code Official DATE

IN COMPIANCE WITH 2009 IRC CODE

APPROVED AS TO COMPLIANCE WITH ZONING ORDINANCE.

SCANNED
AUG 22 2012
ELECTRONICALLY FILED

CALN TOWNSHIP

DEPARTMENT OF CODE ENFORCEMENT

Andrew F. Reczek, Director of Code Enforcement
Stephen L. Miller, Code Official / Fire Marshal
Raymond Stackhouse, Code Official / Deputy Fire Marshal
Joseph Arvay, Property Maintenance / Housing Inspector

www.calntownship.org

Phone: 610-384-0600 Ext. 145 Fax: 610-384-0689
Email: smiller@calntownship.org
253 Municipal Drive, P.O. Box 72149 Thorndale, Pa. 19372-0149

MISCELLANEOUS INSPECTION REPORT

DATE: 7/30/12 (SM)

LOCATION: 3317 Alydar

TYPE OF INSPECTION: Deck Final

- Deck complete ok For Use (OK)
- (2) Hold controls in place, Diagonal Decking / Bracing ok
- Guard in place, Height & spindle spacing ok, mechanical Brackets in place
- Beam At Fire place Bump out ~~Blocked~~ Blocked out to Deck support post
- Steps ok with graspable Rail
- Light ok, Existing Door Light
- * Drywall in Basement ok to be repaired (SM) From Hold control Install

(SM)

CALN TOWNSHIP

DEPARTMENT OF CODE ENFORCEMENT

Andrew F. Reczek, Director of Code Enforcement
Stephen L. Miller, Code Official / Fire Marshal
Raymond Stackhouse, Code Official / Deputy Fire Marshal
Joseph Arvay, Property Maintenance / Housing Inspector

www.calntownship.org

Phone: 610-384-0600 Ext. 145 Fax: 610-384-0689
Email: smiller@calntownship.org
253 Municipal Drive, P.O. Box 72149 Thorndale, Pa. 19372-0149

MISCELLANEOUS INSPECTION REPORT

DATE: 7/30/12 (SM)

LOCATION: 3317 Alydar

TYPE OF INSPECTION: Deck Final

- Deck complete ok For Use (OK)
- (2) Hold controls in place, Diagonal Decking / Bracing ok
- Guard in place, Height & spindle spacing ok, mechanical Brackets in place
- Beam At Fire place Bump out ~~Brackets~~ Blocked out to Deck support post
- Steps ok with graspable Rail
- Light ok, Exterior Door Light
- * Drywall in Basement ok to be repaired (SM) From Hold control Install

(SM)

CALN TOWNSHIP

DEPARTMENT OF CODE ENFORCEMENT

Andrew F. Reczek, Director of Code Enforcement
Stephen L. Miller, Code Official / Fire Marshal
Raymond Stackhouse, Code Official / Deputy Fire Marshal
Joseph Arvay, Property Maintenance / Housing Inspector

www.calntownship.org

Phone: 610-384-0600 Ext. 145 Fax: 610-384-0689
Email: smiller@calntownship.org
253 Municipal Drive, P.O. Box 72149 Thorndale, Pa. 19372-0149

MISCELLANEOUS INSPECTION REPORT

DATE: 7/25/12 (SA)

LOCATION: 3317 Aydor

TYPE OF INSPECTION: Deck Rough

- 6x6 posts notched for Beam
- Double 2x12 Beam, set in post notch & Thru Bolted.
- 2x10 Joists, 12" o.c., on Hangers at Ledger
- 2x10 ledger, flashing & Hangs w/ Ledger Loc's Documentation Supplied Equaling 1/2" Lags

* Hold controls not in place

* Guard not Installed.

* Double Beam at Steps due to Fire Place Cantilever

(SA)

LedgerLok

LedgerLok is engineered to attach the ledger board to the rim board of a house without predrilling.

Installation Instructions

LedgerLok should be installed using a high torque, ½" variable speed drill (18V if cordless). Choose the proper length so that threads fully engage the main member (i.e., rim joist). Bring washer flush to side member—do not countersink. Not for use in masonry or concrete.

Fastening Pattern

For correct fastening patterns and complete installation procedures when attaching the deck ledger to rim joist, consult our Deck Ledger to Rim Joist Technical Bulletin at www.FastenMaster.com. In some ledger board connections, LedgerLok may not be a one-to-one replacement for ½" lag screw patterns. When using in non-ledger applications, a design professional should be consulted for all critical connections, which include the number and location of all fasteners to meet national and local code requirements.

Guaranteed Corrosion Resistance

LedgerLok is guaranteed not to rust or streak for the life of the project. The fastener has also been tested and approved for use in ACQ. A guarantee regarding this can be found on our website. LedgerLok is not recommended for saltwater applications.

Comparative Data

The statement *"Faster, Easier, Stronger than ½" lag screws"* refers to the comparison of LedgerLok design values in ICC-ES Report #1078 and ½" lag screws as published in the current NDS.

For complete design values and engineering data, available through ICC-ES, see report ESR #1078 at www.icc-es.org.

For technical assistance or questions regarding proper use of this fastener, please contact FastenMaster Technical Support at 800-518-3569 or visit www.FastenMaster.com.

Caution: Photographs should not be used as a reference for fastening patterns.

Lateral Design Values (in pounds per Fastener) for Single Shear Connections Loaded Perpendicular to Grain

Wood	Specific Gravity**	FastenMaster LedgerLok	Nails	Lags	
			16D	⅜"	½"
Red Oak	0.67	373	184	160	280
Southern Pine	0.55	290	154	140	230
Doug. Fir-L, SCL*	0.50	255	141	130	200
Doug. Fir-S	0.46	233	131	120	190
Hem. Fir	0.43	216	122	120	180
E. Spruce, W. Cedar	0.36	179	104	100	150

*SCL = Structural Composite Lumber (LVL, PSL and LSL)

**Wood species indentified typically have average specific gravity similar to the values shown on this table.

All design values based on 1½" side member thickness and penetration into main member as follows. LedgerLok 2¼", Nails 10x diameter, Lags 8x diameter. Design values may be subject to adjustment factors (section 10.3 in NDS) based on conditions existing during installation as well as those expected during service life.

The lag screw and nail design values included in these tables are compiled directly from the 2005 National Design Specification for Wood Construction (2005 NDS).

FastenMaster. FASTER EASIER STRONGER

FastenMaster® and LedgerLok® are trademarks of OMG Inc. Copyright ©2011 OMG, Inc. All rights reserved.
153 Bowles Road, Agawam, MA 01001 800-518-3569 www.FastenMaster.com Made in USA

CALN TOWNSHIP

DEPARTMENT OF CODE ENFORCEMENT

Andrew F. Reczek, Director of Code Enforcement
Stephen L. Miller, Code Official / Fire Marshal
Raymond Stackhouse, Code Official / Deputy Fire Marshal
Joseph Arvay, Property Maintenance / Housing Inspector

www.calntownship.org

Phone: 610-384-0600 Ext. 145 Fax: 610-384-0689
Email: smiller@calntownship.org
253 Municipal Drive, P.O. Box 72149 Thorndale, Pa. 19372-0149

MISCELLANEOUS INSPECTION REPORT

DATE: 7/23/12

LOCATION: 3317 Alydar

TYPE OF INSPECTION: Site / Footers Deck 10x25

- Site ok per approved plan 20' setback provided

- (4) pier footers, 7' o.c., 36" x 14" in. firm / Dry / Unyielding soil

* Gutter Drains line to Seepage bed Hit & Repaired w/ SDR & Ferneco Fittings

SW

TOWNSHIP OF CALN
253 MUNICIPAL DR
THORNDALE, PA. 19372
610/384-0600

24 hrs. notice required for inspection scheduling

INSPECTION ASSIGNMENT SHEET

Building Permit No. 2012-00128-BUI

Location 3317 ALYDAR RD, DOWNINGTOWN, PA 19335

Owner RICHARDSON, DALE S. & PHYLLIS V.

Contractor KING DECKS PA. LIC. #073330 (717.806.1035)

Description DECK - SEE COPY OF PERMIT REVIEW LETTER ATTACHED.

Comments SEE COPY OF PERMIT REVIEW LETTER ATTACHED.

SITE INSPECTION PRIOR TO BEGINNING CONSTRUCTION

FORM INSPECTION PRIOR TO POURING FOOTERS

ROUGH FRAMING INSPECTION PRIOR TO INSULATION OR INTERIOR COVERING (rough elec

FINAL INSPECTION (performed after work is complete and PRIOR TO USING OR OCCUPYING CO

CALN TOWNSHIP
DEPARTMENT OF CODE ENFORCEMENT
Andrew F. Reczek, Director of Code Enforcement
Stephen L. Miller, Code Official / Fire Marshal
Raymond Stackhouse, Code Official / Deputy Fire Marshal
Joseph Arvay, Code Official / Housing Inspector
610.384.0600 fax: 610.384.0689 Email: andyr@calntownship.org
253 Municipal Drive, P.O. Box 72149 Thorndale, Pa 19372-0149
www.calntownship.org

June 19, 2012

Dale & Phyllis Richardson
3317 Alydar Rd
Downingtown, PA 19335

PERMIT REVIEW: Building Permit / Accessory Deck (250 sq.ft)

1. All work shall comply with the 2009 International Residential Code and the Caln Township Zoning Code.

2. Deck structure shall maintain the minimum 20' rear yard setback in accordance with Sections 155-56 D and 155-116 A (5).

3. All new deck footings shall be placed on firm and stable soils at a minimum depth of 36" below grade. **Attachment shall be provided at the connection between post and footing to prevent uplift.**

4. **(2) 2" x12" beam is permitted to span a maximum 8'1"' in accordance with Table R502.5 (2).** Bearing and attachment shall be provided at each supporting post.

5. 2" x 10" floor joists, SPF #2, 12" on center shall be limited to 17'3"; Joist cantilevers shall not exceed 2'. Adequate bearing shall be provided for all joist members. Joist hangers shall be provided as required for bearing. **Deck shall only be used to support a normal 40 lb.psf live load unless additional information is provided**

6. **Ledger shall be connected to the primary structure's 2" nominal band board or 1" x 9 ½" Douglas Fir Laminated veneer lumber using ½" lag screws or bolts spaced a minimum of 23" on center, staggered. Lag screws / bolts shall not be placed within 2" of the top or bottom of the ledger board. Tip shall fully extend through the inside face of the band joist (INSPECTION REQUIRED)**

7. **Two 1,500 lb. Hold Downs shall be installed to control lateral movement in accordance with R502.2.2.2**

8. Composite decking shall be installed in accordance with the manufacture's specification.

9. Flashing shall be provided at the connection between ledger board and the main structure.

10. **Riser heights at exterior doors shall not exceed 7 ¾"**

11. **Stair risers shall not exceed 8 ¼ " in height, Tread depths shall not be less than 9". All risers shall be enclosed and shall not differ in height more than 3/8"**

12. **Guard railings are required on all raised surfaces (decks, ramps or patios) 30" or greater above grade and on all open sides of stairways with 4 or more risers. Guard Railings shall be a minimum 36" in height and be capable of preventing the passage of a 4" sphere. Guards shall support a 200 lb. lateral load at any point along the top rail.**

13. **A graspable hand railing is required on at least one side of stairs with 4 or more risers. Hand railings shall be 34" – 38" above the stair nosing.**

14. **Stairway illumination shall be provided to all stair treads in accordance with Section R303.6**

15. Contractors shall be properly registered with the Commonwealth of Pennsylvania Attorney General's office

16. **Inspections shall be scheduled allowing a minimum of 24-hr notice by calling 610-384-0600. Required inspections include; 1) Site, 2) Footings prior to pour, 3) Rough Framing, 4) Final**

Job Name = Dale Richardson

3317 Alydar RD

Framing Plan

Scale = 1/4" = 1'

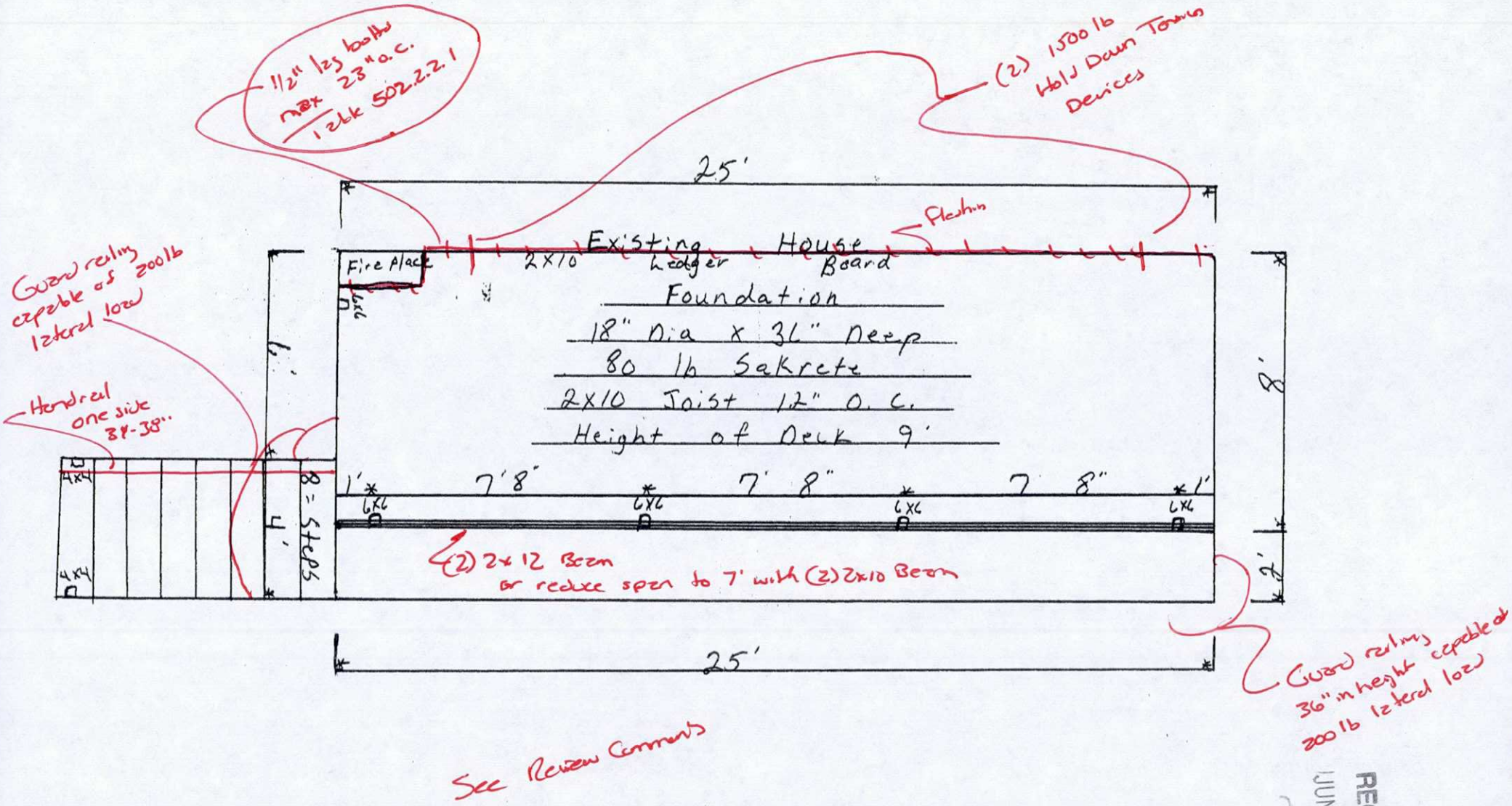

See Review Comments

RECEIVED
JUN 08 2012

Contractor: Dale S. Richardson 6-7-12

Plot Plan

RECEIVED
JUN 08 2012
CODES

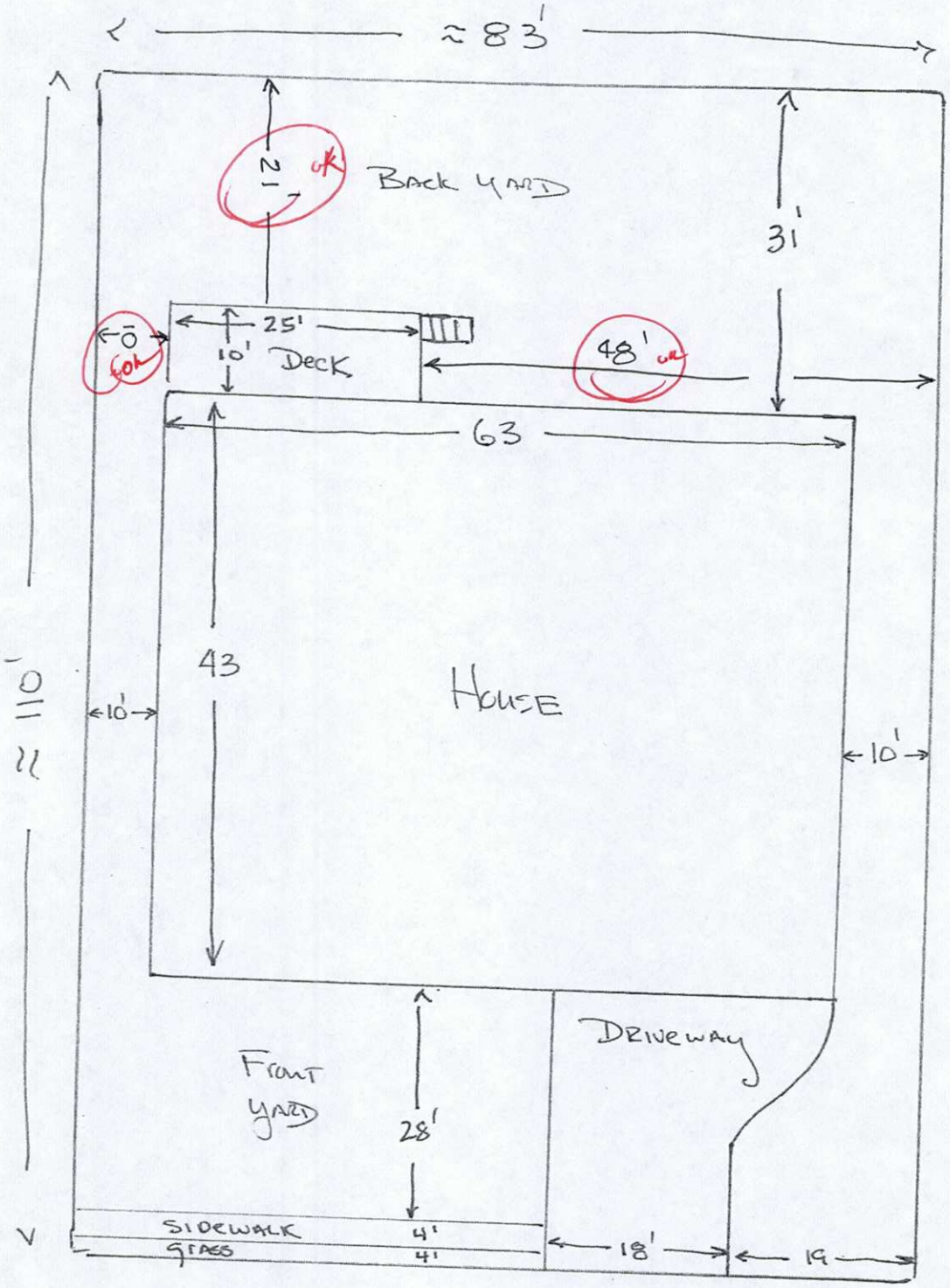

Measurements made using tape measure, so all measurements are approximate

Dale Richardson 6-8-17

King Decks

318 Hollow Road
Quarryville, PA 17566
(717) 806-1035

RECEIVED
JUN 08 2012
CODES

Permit Yes X No ___ **Permit** Contractor ___ Customer X

Customer Name Dale Richardson Phone 484-888-8868
Address 3317 Alydar RD Fax
City Downingtown State PA Zip 19335 Township CALN
Description 10'x 25' Treated Deck w/ Steps to Grade

Height of Deck 9' Color of Siding ___ Date of Agreement ___

Decks

Treated	X
Cedar	
Composite	
Square Corners	X
45 Corners	
Floor Reg.	
Floor Angle	X
Floor Screwed	X Stainless Steel
Floor Nailed	
Koma on Face B	
Upright Deck B	
Benches	
Flower Boxes	
Need Ledger B	X
Beams Wrapped	
Post Wrapped	
Bumpout on House	X
Extra Beam	X
Shade Arbor	
Lattice Wood ___ Vinyl ___	

Railings

Railing on Deck	X
Treated	Xenwo
Cedar	
Vinyl	X
Composite	
Other	
2x2 Square Spindle	X
Colonial	
Post Tops	X
Lights	
Sun Burst	
Privacy Wall	
Treated Gate	
Cedar Gate	
Vinyl Gate	
Composite	

Steps

Reg.	X
Octagon off deck	
Railing on Steps	X
6x6 Landing Octagon steps	
4x4 Landing in steps	

Screen Porches & Sunrooms

Material Wood		Vinyl
Sidewall Railing		Knee Wall
Roof A-Frame		Shed
Ceiling Flat		Cathedral
Roof into Sidewall		Roof
4x4 Post Treated		Vinyl
Ceiling Finished	Yes	No
Ceiling Wood		Vinyl
Screen in Floor	Yes	No
Vinyl Screen Tight		Wood Frame
Redo House Wall	Yes	No
Skylights	Yes	No
Screen Door	Wood	Vinyl
Header Wrapped	Yes	No
Soffit	Yes	No
Gutter	Yes	No
Elec.	Customer	Contractor
Elec. Included in Price	Yes	No
Gable Overhang	Yes	No

We propose hereby to furnish material and labor — complete in accordance with the above specifications for the sum of:
$ Total $3900.00 ($1900.00 down day we start) ($2000.00 due upon completion)

Builder will provide plans and paper work (other than plot plans) to obtain permit. Regardless of who gets permit, contractor will take care of inspections. Builder will carry $1,000,000 liability insurance to cover any accidents on the job site. The start date given is just an estimated date, subject to change due to weather and work and work related reasons. Builder will notify customer within two days of original date of any start date changes. **Customer** after acceptance of completion, including but not limited to, workmanship, materials and construction methods, final payment will be due. Any work that is not listed on contract will be considered as add-ons and after agreement (by both parties) on additional work and price. Payment will be due upon completion of job. If equipment has to be used (other than standard digger), customer agrees to pay additional cost after price agreement by both parties. After three days customer will pay a $150.00 cancellation fee unless reasons are due to permits or plans being denied. This contract is not valid until both parties have signed. Composite decking has a tendency to fade. King Decks will not be responsible for treated wood cracking, warping, splitting or shrinking. King Decks will not be responsible for any color changes in decking. Also, King Decks will not be responsible for any dirt or grass being disturbed, trampled or driven on at time of construction. By signing the agreement both parties agree to all the above terms.

Builder Signature Lonnie L Lapp Date 5-25-12
Customer Signature Dale S. Richardson Date 6-7-12

PA073330
MHIC103233

Job Name = Dale Richardson
3317 Alydar RD

Decking & Railing Plan
Scale = 1/4" = 1'

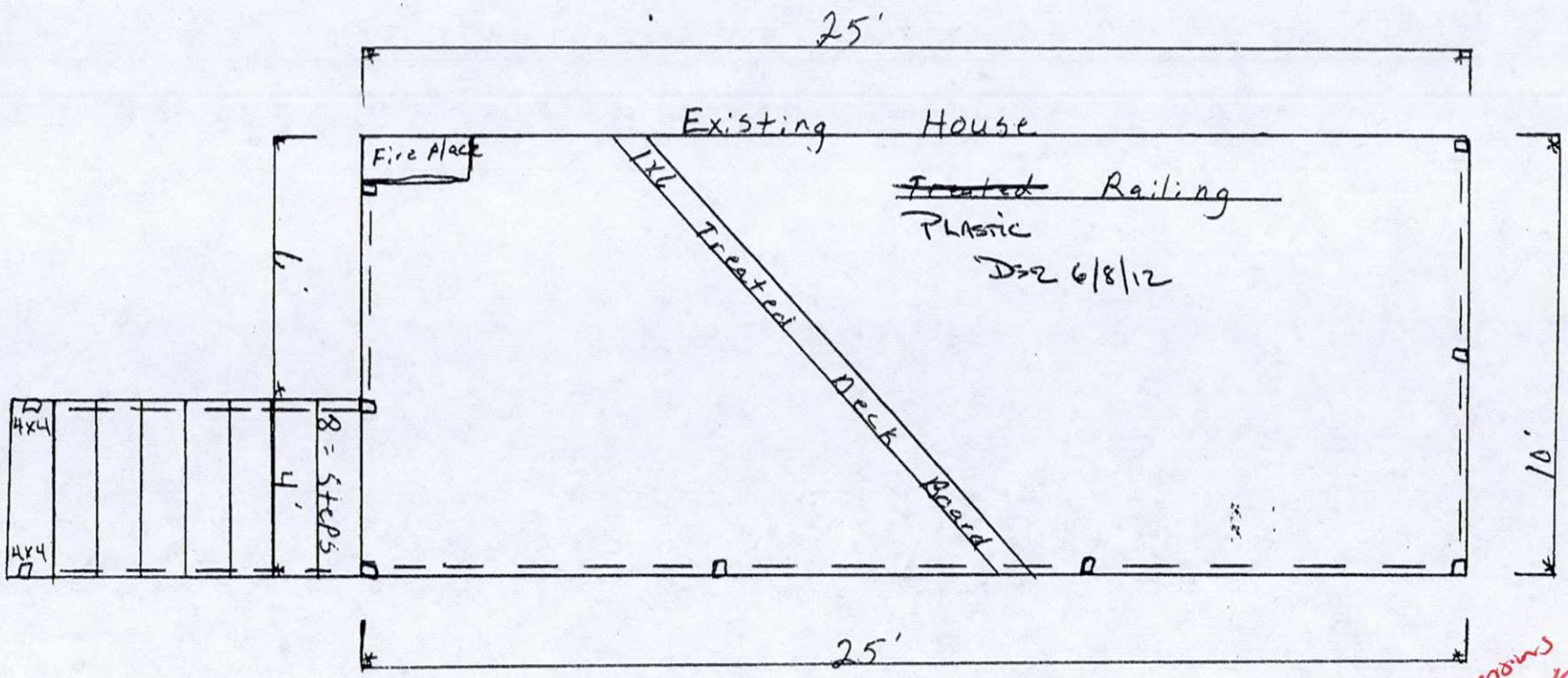

Denied 6/19/2012

material dimensions
footing depth
spans
Beam sized
anchoring

Railing { White Posts and white horizontal Rails.
Light Brown vertical struts

RECEIVED
JUN 08 2012
CODES

#3474 Richardson $10

RECEIVED
JUN 08 2012
CODES

CALN TOWNSHIP
253 Municipal Drive, Thorndale, PA 19372
610/384-0600, Fax – 610/384-0689
BUILDING PERMIT APPLICATION – PERMIT FEES ARE NON-REFUNDABLE
Minimum fee due at time of permit application

Address 3317 ALYDAR ROAD **Subdivision** Crossings at Bailey ST **Lot #** 129 **Zoning Dist.** R-3

Building Improvement
- New Building ☐
- Addition ☐
- Alteration ☐
- Basement ☐
- Deck /Ramp 250 sq. ft ☒
- Demolition ☐
- Driveway ☐
- Fire Protection
- Sprinkler/Alarm ☐
- Hot Tub ☐
- Tenant fit-out ☐
- Mechanical ☐
- Plumbing ☐
- Pool ☐
- Roof ☐
- Shed (>1000 sq. ft.) ☐
- Tank ☐
- Other ☐

IDENTIFICATION – To be completed by all applicants
OWNER
Name: DALE & Phyllis Richardson
Address: 3317 ALYDAR ROAD
Downington, PA 19335
Phone #: 484-888-8868

Contractor Information: **Effective 7/1/09 State Cert. number required.** PA073330
Name: ~~King Decks~~ DCA King Decks
Address: 318 Hollow Road
Quarryville, PA 17566
Phone #: 717 806 1035

DATE: 6-7-12
Job Cost: +3900

Sewage Disposal
Public ☒ Private ☐

Water Supply
Public ☒ Private

Type of Construction
IA ☐ IB ☐
IIA ☐ IIB ☐
IIIA ☐ IIIB ☐
IV ☐
VA ☐ VB ☐

Residential ☒
Location: 3317 ALYDAR RD

Commercial ☐
Location:

Site located in Flood Area
Yes ☐ No ☒

Submit floor plan showing Location w/clearances & material types /Mechanical
Central AC?
Yes ☐ No ☐
Will there be an Elevator?
Yes ☐ No ☐
N/A

Residential Building Area:
# of Stories 1 1/2
Basement
Garage
1st. Floor
2nd. Floor
Total ~~Habitable~~ Space ~~2600 sq ft~~ 250 sq ft Deck

Commercial Projects:
Use Group
Classification
Occupancy Load
Sprinklered ☐ Yes ☐ No

Residential Bldg. Only
Bedrooms 3
Bathrooms 2 1/2

Residential Bldg. Only
Bedrooms
Bathrooms

Type of Heating Fuel
- Gas ☒
- Oil ☐
- Electric ☐
- Coal ☐
- Other ☐

Lot Area _____ sq.ft.
Building Coverage _____ sq.ft.
Total Impervious Coverage _____ sq.ft.

 # Off Street Parking Spaces.

SIGNATURE OF APPLICANT: Dale Richardson DATE: 6-7-12

DESCRIPTION /COMMERCIAL ACTIVITIES None

DO NOT WRITE IN THIS SPACE – FOR OFFICE USE ONLY

Permit # 128 | Approved By: [signature] | Permit Fee: 125.00 | Date Issued: 6/19/2012

REMARKS: See attached Plan Revisions + Review Comments

TOWNSHIP OF CALN

PERMIT

Permit No: 2012-00128-BUI

Date Issued: 6/19/2012

Location of Work: 3317 ALYDAR RD

Type of Work: DECK - SEE COPY OF PERMIT REVIEW LETTER ATTACHED.

Owner: RICHARDSON, DALE S. & PHYLLIS V.

Contractor: KING DECKS PA. LIC. #073330

Parcel #:

BUILDING CODE OFFICIAL

THIS PLACARD MUST BE POSTED IN A CONSPICUOUS PLACE ON THE PREMISES, EASILY VISIBLE FROM THE PRINCIPAL STREET, WELL SECURED IF EXPOSED TO THE WEATHER, DURING THE ENTIRE CONSTRUCTION TIME.

WORK MUST BE STARTEDWITHIN 6 MONTHS FROM DATE OF ISSUE

RECEIVED
JUN 08 2011
CODES

www.calntownship.org

CALN TOWNSHIP

DEPARTMENT OF CODE ENFORCEMENT
Andrew F. Reczek, Director of Code Enforcement
Stephen L. Miller, Code Official/Fire Marshal
Raymond Stackhouse, Code Official/Deputy Fire Marshal
Joseph Arvay, Property Maintenance/Housing Inspector
610-384-0600 fax: 610-384-0689 Email: andyr@calntownship.org
253 Municipal Drive, P.O. Box 72149 Thorndale, Pa. 19372-0149

BUILDING PERMIT SUBMITTAL REQUIREMENTS

1. All applications must include two (2) sets of both site plans and construction documents as outlined below. Minimum fees will be collected at time of application.

   A. Site plans for Commercial and Residential projects must include;

   - dimensions for all buildings, structures and areas of impervious coverage found on the property
   - Setback dimension from all adjacent property lines
   - Commercial projects include parking information and accessible routes.
   - Demolition submissions must include a site plan and utility disconnect location

   B. Construction Documents must include the following:

   - Commercial projects require plans and details minimum ¼" scale, signed and sealed by a Design Professional registered in the Commonwealth of Pennsylvania.
   - Residential projects require plans and details shall be a minimum ¼" scale, (may require sealed drawings depending on the scope of the project)
   - All Construction documents must include elevations, cross sections and all mechanical, electrical, plumbing and energy compliance details.
   - Electrical plans must be approved by a Third Party agency
   -

2. Contractors performing "Home Improvement" activities shall provide a Pennslvania home Improvement Contractor license. All other contractors shall be registered in Caln Township.

3. Allow up to thirty (30) days for all reviews.

Total #25.00
CC

Date 6/29/12

Township of Caln
Receipt and Proof of Payment

GENERAL FUND

01-10-322-910 -- Police Services

01-10-322-900 -- Street Opening Fee

01-10-331-125 -- Vehicle/Speed Ctrl/Ordinance

01-10-361-305 -- Planning Fees

01-10-361-340 -- Zoning Hearing

01-10-362-410 -- Building Permit $25.00

01-10-362-415 -- Fire Inspection

01-10-362-452 -- U & O Res & Com

01-10-362-601 -- Housing Annual Rental Fee

01-10-362-602 -- Housing Tenant change Fee

01-10-362-610 -- Contractor License Fee

01-10-363-700 -- Bus Shelters

01-10-380-100 -- Miscellaneous

01-10-380-105 -- Tax Certification Fees

01-10-380-106 -- Newsletter adversiting

01-10-380-107 -- Ticket Sales

01-10-380-110 -- Cell Tower Fees

01-10-314-605 -- Admission Tax

01-10-314-700 -- Mechanical Tax

01-10-387-305 -- Parks/Pavilions

01-10-387-309 -- Recreation Programs

01-_____ --

01-_____ --

01-_____ --

SEWER FUND

08-10-364-824 -- Inspection Fees

08-_____ --

OTHER FUNDS

3317 [illegible]

PAID
JUL 02 2012
CALN TOWNSHIP

Department [illegible]

Finance

TOWNSHIP OF CALN
253 MUNICIPAL DR
THORNDALE, PA. 19372
610-384-0600

CERTIFICATE OF OCCUPANCY

Building Permit No.: 13-00244

Zoning District: R-3

Permission is hereby given:

CAPUZZI, KEVIN & MEGHAN
(owner of use)

owner (new)

CAPUZZI, KEVEN & MEGHAN
contractor

Use Type: R RESIDENTIAL

(Lot & Development)

REMARKS

At: 3337 ALYDAR RD

Description: RESIDENTIAL ACCESSORY STRUCTURE - DECK

8/19/13
Building Inspector DATE

8/19/13
Zoning Officer/Building Code Official DATE

APPROVED AS TO COMPLIANCE
WITH ZONING ORDINANCE.

IN COMPLIANCE WITH 2009 IRC CODE

SCANNED
AUG 19 2013
ELECTRONICALLY FILED

CALN TOWNSHIP

DEPARTMENT OF CODE ENFORCEMENT

Andrew F. Reczek, Director of Code Enforcement
Stephen L. Miller, Code Official / Fire Marshal
Raymond Stackhouse, Code Official / Deputy Fire Marshal
Joseph Arvay, Property Maintenance / Housing Inspector

www.calntownship.org

Phone: 610-384-0600 Ext. 145 Fax: 610-384-0689
Email: smiller@calntownship.org
253 Municipal Drive, P.O. Box 72149 Thorndale, Pa. 19372-0149

MISCELLANEOUS INSPECTION REPORT

DATE: 8/16/13

LOCATION: 3337 Alyda

TYPE OF INSPECTION: Final Deck

- Deck Complete
- Guard system ok
- Steps & Stairable Rail ok
- Lateral Bracing provided.
- Existing Illumination
- ok for U&O

CALN TOWNSHIP

DEPARTMENT OF CODE ENFORCEMENT

Andrew F. Reczek, Director of Code Enforcement
Stephen L. Miller, Code Official / Fire Marshal
Raymond Stackhouse, Code Official / Deputy Fire Marshal
Joseph Arvay, Property Maintenance / Housing Inspector

www.calntownship.org

Phone: 610-384-0600 Ext. 145 Fax: 610-384-0689
Email: smiller@calntownship.org
253 Municipal Drive, P.O. Box 72149 Thorndale, Pa. 19372-0149

MISCELLANEOUS INSPECTION REPORT

DATE: 6/18/13 SM

LOCATION: 3337 Alydar

TYPE OF INSPECTION: Deck Rough

- 6x6 posts, Notched For Beam, mech Fastened to Footer
- Double 2x10 / 2x12 Based on post span
- 2x8 Joists 16" OS, on Hangers At Ledger, 2' cantilever, (2) Hold Controls in place
- 2x8 Ledger, Flashed properly, Laged with Ledger Locks ICC Rated Better than 1/2" Lags
- Home owner understands Not to Notch guard posts & need for Mechanical Fastening
- ok to continue

SM

CALN TOWNSHIP

DEPARTMENT OF CODE ENFORCEMENT

Andrew F. Reczek, Director of Code Enforcement
Stephen L. Miller, Code Official / Fire Marshal
Raymond Stackhouse, Code Official / Deputy Fire Marshal
Joseph Arvay, Property Maintenance / Housing Inspector

www.calntownship.org

Phone: 610-384-0600 Ext. 145 Fax: 610-384-0689
Email: smiller@calntownship.org
253 Municipal Drive, P.O. Box 72149 Thorndale, Pa. 19372-0149

MISCELLANEOUS INSPECTION REPORT

DATE: 5/7/13 (SM)

LOCATION: 3337 Alydar Road (OK)

TYPE OF INSPECTION: Deck Site (OK)

- Setbacks ok per approved plot plan, work over 20'
- Footer measures incorrect, Double 2x10 Beam. Exceed 7' span. Increase beam size or Reduce span
- Contacted & Left message w/ owner. Spoke to owners Father, Changes understood.

(SM)

5/22/2013

Deck footing 12" diameter 36" in depth with solid Bottom

max span between footing 6'6" OK to pour AFK

TOWNSHIP OF CALN
253 MUNICIPAL DR
THORNDALE, PA. 19372
610/384-0600

24 hrs. notice required for inspection scheduling

INSPECTION ASSIGNMENT SHEET

Building Permit No. 13-00244

Location 3337 ALYDAR RD , DOWNINGTOWN, PA 19335

Owner CAPUZZI, KEVIN & MEGHAN

Contractor OWNER/APPLICANT

Description DECK

Comments SEE COPY OF PERMIT REVIEW LETTER ATTACHED

SITE INSPECTION PRIOR TO BEGINNING CONSTRUCTION

FORM INSPECTION PRIOR TO POURING FOOTERS

ROUGH FRAMING INSPECTION PRIOR TO INSULATION OR INTERIOR COVERING (rough elec

FINAL INSPECTION (performed after work is complete and PRIOR TO USING OR OCCUPYING CO

CALN TOWNSHIP
DEPARTMENT OF CODE ENFORCEMENT
Andrew F. Reczek, Director of Code Enforcement
Stephen L. Miller, Code Official / Fire Marshal
Raymond Stackhouse, Code Official / Deputy Fire Marshal
Joseph Arvay, Code Official / Housing Inspector
610.384.0600 fax: 610.384.0689 Email: andyr@calntownship.org
253 Municipal Drive, P.O. Box 72149 Thorndale, Pa 19372-0149
www.calntownship.org

April 22, 2013

Kevin Capuzzi
3337 Alydar Rd.
Downingtown, PA 19335

PERMIT REVIEW: Building Permit / Accessory Deck (324 sq.ft)

1. All work shall comply with the 2009 International Residential Code and the Caln Township Zoning Code.
2. **Deck structure shall maintain the minimum 20' rear yard and 10' side yard setback in accordance with the Section 155-56 D and 155-116 A (5).**
3. All new deck footings shall be placed on firm and stable soils at a minimum depth of 36" below grade. **Mechanical attachment** shall be provided at the connection between post and footing to prevent uplift.
4. (2) 2" x10" beam is permitted to span a **maximum 7'0"** in accordance with Table R502.5 (2). Mechanical attachment shall be provided at each supporting post.
5. 2" x 8" floor joists, SPF #2, 16" on center shall be limited to 12'3"; Joist cantilevers shall not exceed 2'. Adequate bearing shall be provided for all joist members. Joist hangers shall be provided as required for bearing
6. **Ledger shall be connected to the primary structure's 2" nominal band board or 1" x 9 ½" Douglas Fir Laminated veneer lumber using ½" lag screws or bolts spaced a minimum of 11" on center, staggered. Lag screws / bolts shall not be placed within 2" of the top or bottom of the ledger board. Tip shall fully extend through the inside face of the band joist (INSPECTION REQUIRED)**
7. **(2) 1,500 lb. Hold Down Tension devices shall be installed in accordance with Figure R 502.2.2.3**
8. **Lateral bracing shall be provided to limit deck movement.**
9. Composite decking shall be installed in accordance with the manufacture's specification.
10. Flashing shall be provided at the connection between ledger board and the main structure.
11. **Riser heights at exterior doors shall not exceed 7 ¾"**
12. **Stair risers shall not exceed 8 ¼ " in height, Tread depths shall not be less than 9". All risers shall be enclosed and shall not differ in height more than 3/8"**
13. **Guard railings are required on all raised surfaces (decks, ramps or patios) 30" or greater above grade and on all open sides of stairways with 4 or more risers. Guard Railings shall be a minimum 36" in height and be capable of preventing the passage of a 4" sphere. Guards shall support a 200 lb. lateral load at any point along the top rail in accordance with the American Wood Council detail attached**
14. **A graspable hand railing is required on at least one side of stairs with 4 or more risers. Hand railings shall be 34" – 38" above the stair nosing.**
15. **Stairway illumination shall be provided to all stair treads in accordance with Section R303.6**
16. Contractors shall be properly registered with the Commonwealth of Pennsylvania Attorney General's office
17. **Inspections shall be scheduled allowing a minimum of 24-hr notice by calling 610-384-0600. Required inspections include; 1) Site, 2) Footings prior to pour, 3) Rough Framing, 4) Final**

RECEIVED
APR 19 2013
CALN TWP.

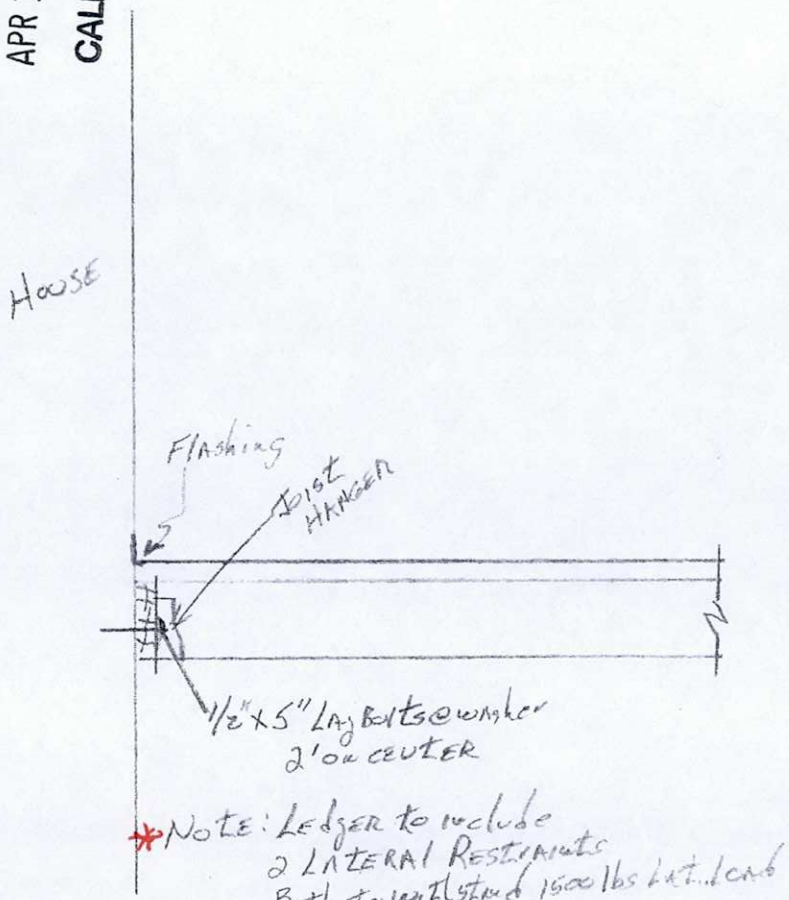

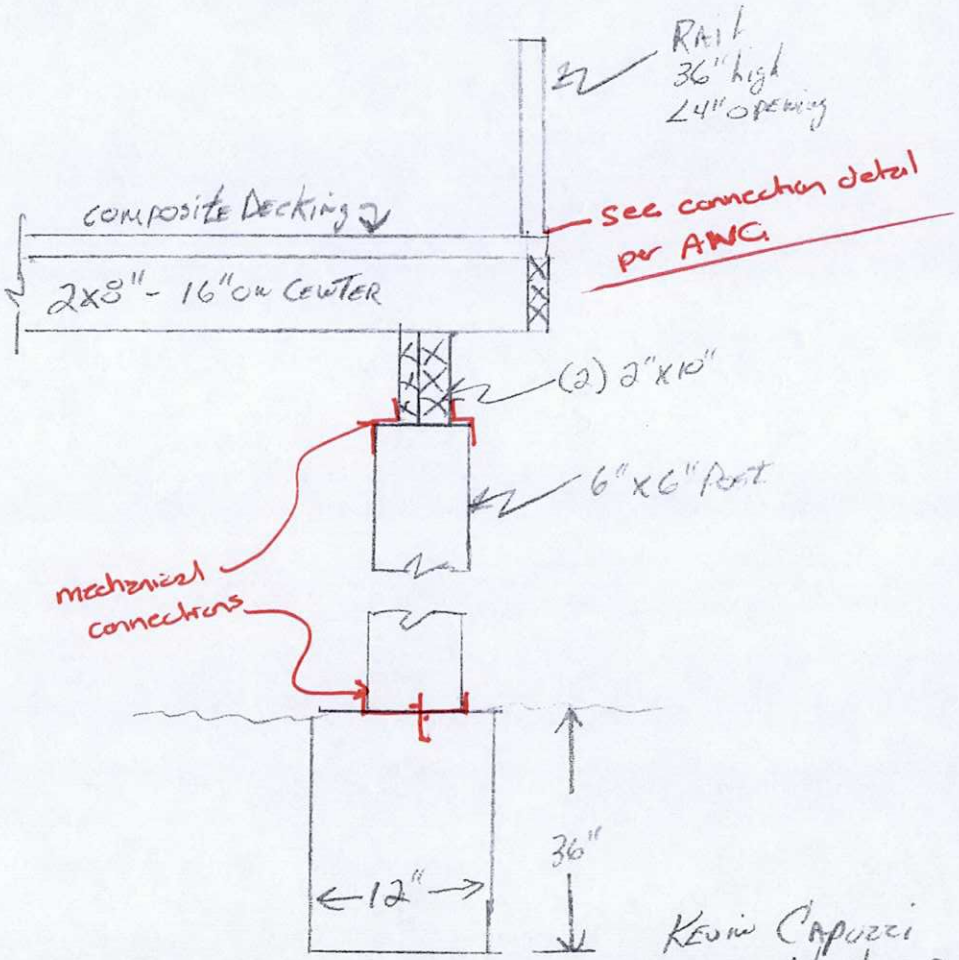

Deck Area 324
x .50
162.00

Kevin Capozzi
3337 Alydar Rd
Downingtown, PA

RECEIVED
APR 19 2013
CALN TWP.

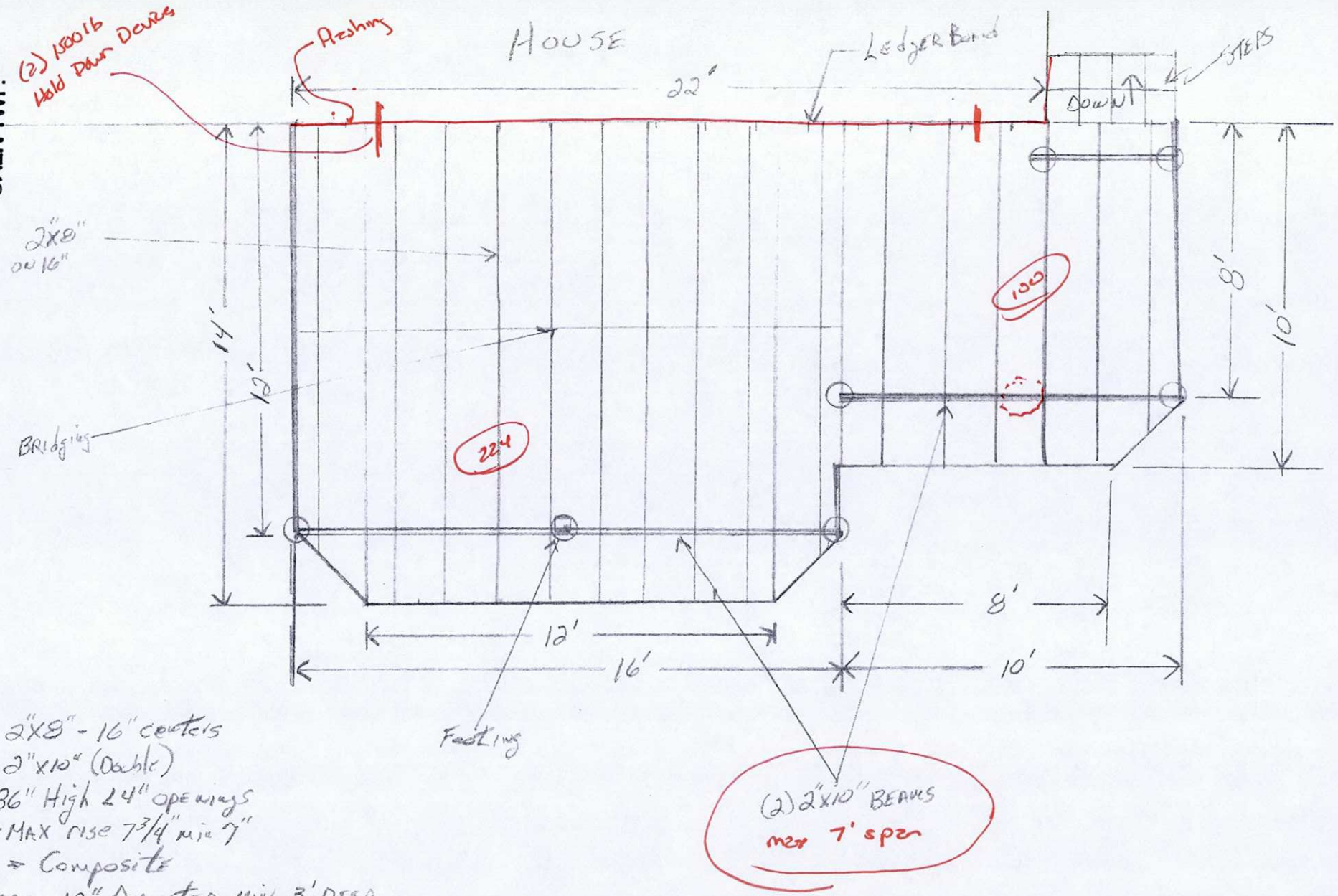

Joists → 2"x8" - 16" centers
Beams → 2"x10" (Double)
Rails → 36" High 4" openings
Stairs → Max rise 7 3/4" min 7"
Decking → Composite
Footings - 12" Diameter min 3' deep

Kevin & Meg Capozzi
3337 Alydar Rd
Downingtown, PA

RECEIVED
APR 19 2013
CALN TWP.

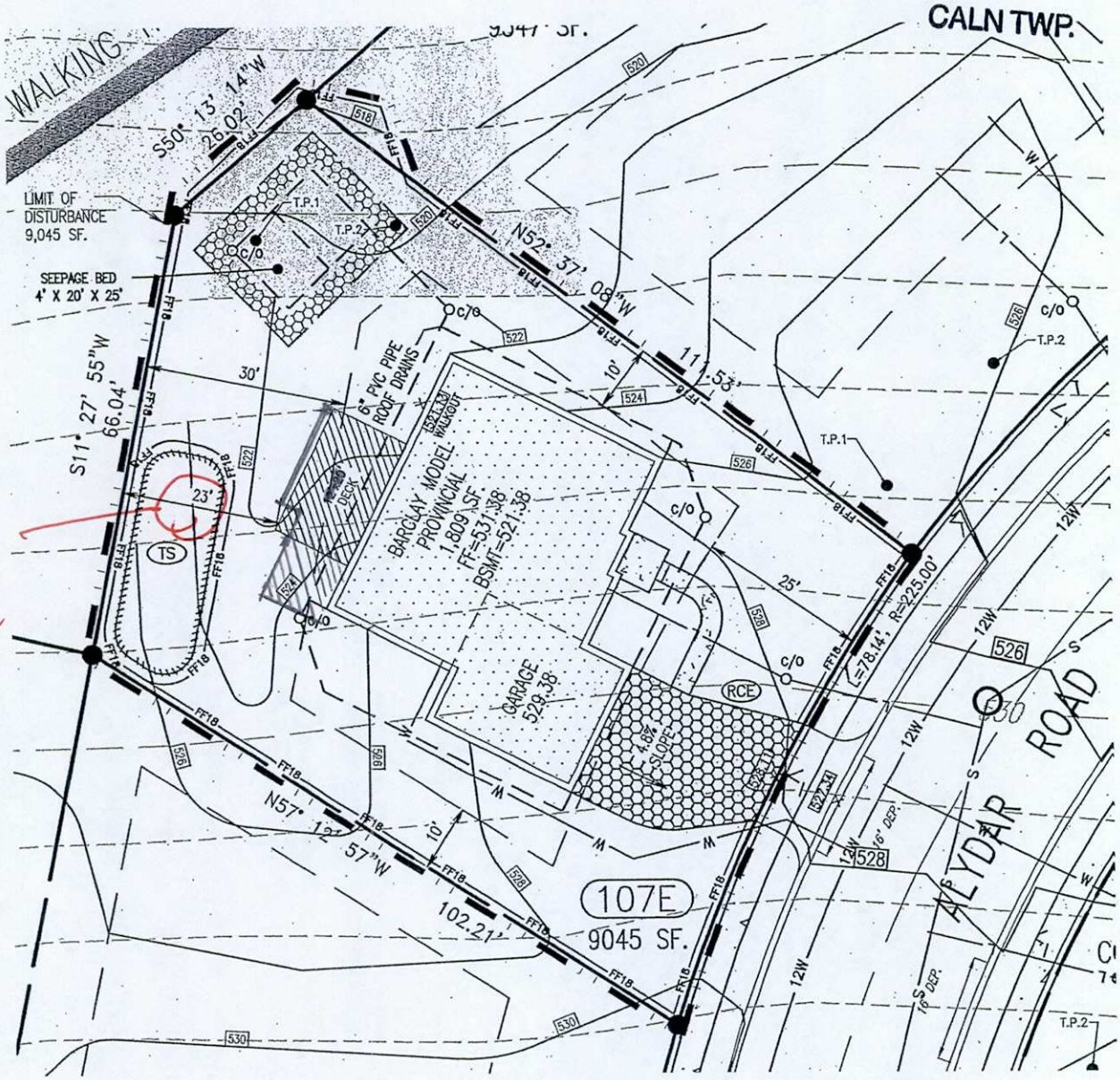

Deck Plan

Kevin & Meghan Capuzzi
3337 Alydar Road
Downingtown, PA 19335

Capuzzi
#847
$100

RECEIVED
APR 19 2013

CALN TWP.

CALN TOWNSHIP
253 Municipal Drive, Thorndale, PA 19372
610/384-0600, Fax – 610/384-0689
BUILDING PERMIT APPLICATION – PERMIT FEES ARE NON-REFUNDABLE
Minimum fee due at time of permit application

Address 3337 Aydar Rd **Subdivision** Crossing at Bailey Station **Lot #** 107E **Zoning Dist.** R3

Building Improvement
- New Building ☐
- Addition ☐
- Alteration ☐
- Basement ☐
- Deck /Ramp ☑
- Demolition ☐
- Driveway ☐
- Fire Protection
- Sprinkler/Alarm ☐
- Hot Tub ☐
- Tenant fit-out ☐
- Mechanical ☐
- Plumbing ☐
- Pool ☐
- Roof ☐
- Shed (>1000 sq. ft.) ☐
- Tank ☐
- Other ☐

IDENTIFICATION – To be completed by all applicants
OWNER
Name: Kevin Capuzzi
Address: 3337 Aydar Road
Downingtown, PA 19335
Phone #: [redacted]

DATE: 4/19/2013
Job Cost:

Sewage Disposal
Public ☑ Private ☐

Water Supply
Public ☑ Private

Contractor Information: Effective 7/1/09 State Cert. number required.
Name:
Address:
Phone #:

Type of Construction
IA ☐ IB ☐
IIA ☐ IIB ☐
IIIA ☐ IIIB ☐
IV ☐
VA ☐ VB ☐

Residential ☑ Location:
Commercial ☐ Location:

Site located in Flood Area
Yes ☐ No

Submit floor plan showing Location w/clearances & material types /Mechanical
Central AC? Yes ☐ No ☑
Will there be an Elevator? Yes ☐ No ☑

Residential Building Area:
# of Stories 2
Basement yes
Garage 2 car
1st. Floor
2nd. Floor
Total Habitable Space 1,809 sq ft

Commercial Projects:
Use Group
Classification
Occupancy Load
Sprinklered ☐ Yes ☐ No

Residential Bldg. Only
Bedrooms 4
Bathrooms 2.5

Residential Bldg. Only
Bedrooms 4
Bathrooms 2.5

Type of Heating Fuel
- Gas ☐
- Oil ☐
- Electric ☑
- Coal ☐
- Other ☐

Lot Area 9045 sq.ft.
Building Coverage sq.ft.
Total Impervious Coverage sq.ft.

 # Off Street Parking Spaces.

SIGNATURE OF APPLICANT: [signature] DATE: 4/19/2013

DESCRIPTION /COMMERCIAL ACTIVITIES

DO NOT WRITE IN THIS SPACE – FOR OFFICE USE ONLY

Permit # 13-00244 | Approved By: [signature] | Permit Fee: $162.00 | Date Issued: 4/22/2013

REMARKS: See attached Review Comment + Guard Details

#1397

TOWNSHIP OF CALN

PERMIT

Permit No: 13-00244

Date Issued: 04/19/13

Location of Work: 3337 ALYDAR RD

Type of Work: DECK - SEE COPY OF PERMIT REVIEW LETTER ATTACHED WITH GUARD DETAILS

Owner: CAPUZZI, KEVIN & MEGHAN

Contractor: CAPUZZI, KEVEN & MEGHAN

Parcel #: 39-4-778.0

BUILDING CODE OFFICIAL

THIS PLACARD MUST BE POSTED IN A CONSPICUOUS PLACE ON THE PREMISES, EASILY VISIBLE FROM THE PRINCIPAL STREET, WELL SECURED IF EXPOSED TO THE WEATHER, DURING THE ENTIRE CONSTRUCTION TIME.

WORK MUST BE STARTEDWITHIN 6 MONTHS FROM DATE OF ISSUE

TOWNSHIP OF CALN
253 MUNICIPAL DR
THORNDALE, PA. 19372
610/384-0400

CERTIFICATE OF OCCUPANCY

Building Permit No. 2012-00070-BUI

UCC Certificate of Occupancy No. 9066

REMARKS

Zoning District R3

Permission is hereby given:

ROHALL, ROGER M. & MARCIA H.
(owner of use)

ROGER AND MARCIA ROHALL
owner (new)

SUNRISE DECKS PA. LIC. #025626
contractor

Use Type: DECK

BAILEY STATION THE CROSSING
(Lot & Development)

At: 3313 ALYDAR RD, DOWNINGTOWN, PA 18335

For: RESIDENTIAL ACCESSORY STRUCTURE - DECK

6/8/12
Building Inspector DATE

6/11/2012
Zoning Officer/Building Code Official DATE

IN COMPLIANCE WITH 2009 IBC CODES

APPROVED AS TO COMPLIANCE WITH ZONING ORDINANCE.

SCANNED
JUN 20 2012
ELECTRONICALLY FILED

CALN TOWNSHIP

DEPARTMENT OF CODE ENFORCEMENT

Andrew F. Reczek, Director of Code Enforcement
Stephen L. Miller, Code Official / Fire Marshal
Raymond Stackhouse, Code Official / Deputy Fire Marshal
Joseph Arvay, Property Maintenance / Housing Inspector

www.calntownship.org

Phone: 610-384-0600 Ext. 145 Fax: 610-384-0689
Email: smiller@calntownship.org
253 Municipal Drive, P.O. Box 72149 Thorndale, Pa. 19372-0149

MISCELLANEOUS INSPECTION REPORT

DATE: 6/7/12 (SM)

LOCATION: 3313 Alydare OK

TYPE OF INSPECTION: Site & Footers Deck 12x20

AM
- (4) pier Footers, 6' o.c., 36" x 14" (Precast Footers)
- Site ok Sides good Rear 23' +

PM
- 6x6 posts Notched for Beam
- Double 2x10 Beam, Set in post Notch & Thru Bolted
- 2x10 Joists, 16" o.c., Set on Beam & mechanically connected, on Hangers at Ledger
- 2x10 Ledger, Ledger Loc Attachments per manufacturers Engineering, Flashing in place
- (2) Lateral Hold contents in place Tieing Deck Joists to House Joists
- Guard system in place, Mechanical Fasteners ok
- Steps & grayeable hand Rail ok
- Lateral Bracing ok

Complete ok for U&O

(SM)

ENGINEERED WOOD PRODUCTS

TECHNICAL BULLETIN

TB-207

March 2012

Deck Attachment for Lateral Loads to TJI® Floor Systems

Section 502.2.2 of the 2009 IRC introduced a requirement for positive attachment of decks to the structure. Decks that are supported by an exterior wall must be positively attached to the structure and designed for lateral and vertical loads. The lateral resistance requirement is noted in IRC Section 502.2.2.3 and states that the lateral load resistance must be accomplished by hold-down devices at no less than two locations per deck with a capacity greater than or equal to 1500 lbs per hold-down device.

This technical bulletin will address proper attachment when TJI® joists are used in the floor system for resisting the minimum 1500 lb lateral load. This technical bulletin should be used as general guidelines for lateral restraint of decks to the structure. If this does not address the situation in question, please contact your Weyerhaeuser Representative at the number below.

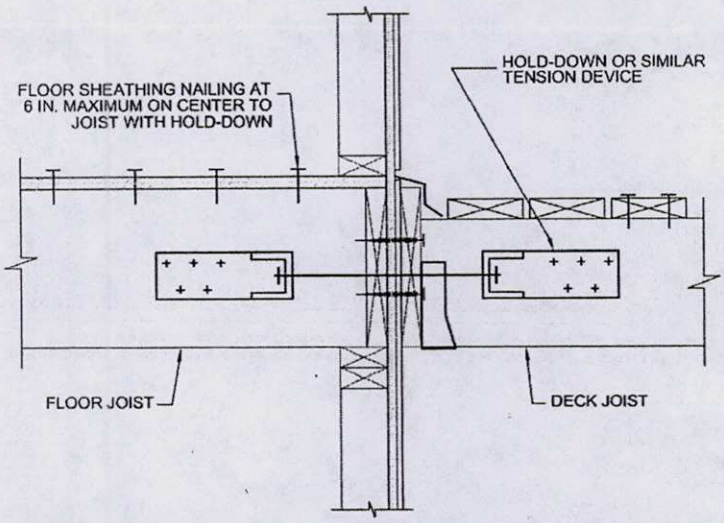

RECEIVED
MAY 30 2012
CODES

Figure 1: 2009 IRC Figure 502.2.2.3: Deck Attachment for Lateral Loads

TABLE 1: BACKER BLOCK AND BLOCKING PANEL LENGTHS(1)(2)(3)(4)

Nails	Backer or Floor Sheathing Thickness		
	¾"	⅞"	1⅛" - 1¼"
8d Common (0.131" x 2.5")	72"	60"	60"
8d Box (0.113" x 2.5")	84"	72"	72"
10d Common (0.148" x 3.0")	60"	48"	48"
10d Box (0.128" x 3.0")	72"	60"	60"
16d Pneumatic (0.135" x 3.5")	60"	60"	60"

(1) Backer blocks are attached with two rows of nails spaced at 6" o.c.
(2) Floor sheathing nailing shall be as follows: Condition 1, 6" o.c. maximum; Condition 2, one row of nails spaced at 3" o.c. or two rows of nails at 6" o.c., staggered.
(3) Nail capacities used follow 2005 NDS Yield Mode equations assuming a specific gravity equal to 0.42.
(4) 16d pneumatic nails are not to be used for sheathing nailing.

Equation 1:

Weyerhaeuser, Forte, Javelin, Microllam, Parallam, Silent Floor, TimberStrand, TJI, TJ, and Trus Joist are registered trademarks and Edge, Edge Gold and TJ-Pro are trademarks of Weyerhaeuser NR. © 2011 Weyerhaeuser NR Company. All rights reserved.

$$L_{Backer} = \left(\frac{R_{Force}}{Z_{Nail}}\right) * \text{Nail Spacing (in.)}$$

Where:

L_{Backer} = Length of backer block, inches
R_{Force} = The required force to resist, lbs
Z_{Nail} = Allowable shear capacity of nail, lbs

Condition 1: TJI® Floor Joists Parallel to Deck Joists:

When the floor joists are installed parallel to the deck joists, as shown below, a backer block of a specified length must be installed to both sides of the TJI® joist web. This will allow for positive attachment of the hold-down or tension tie to the TJI® floor joist. Clinch nails as required.

See Table 1 for the lengths of backer blocks required for different floor sheathing thicknesses. Alternatively, Equation 1 may be used to determine the required length of backer block to use. Floor sheathing must be nailed to the TJI® Joist with hold-down at the specified nail spacing given in Table 1 (Note 2).

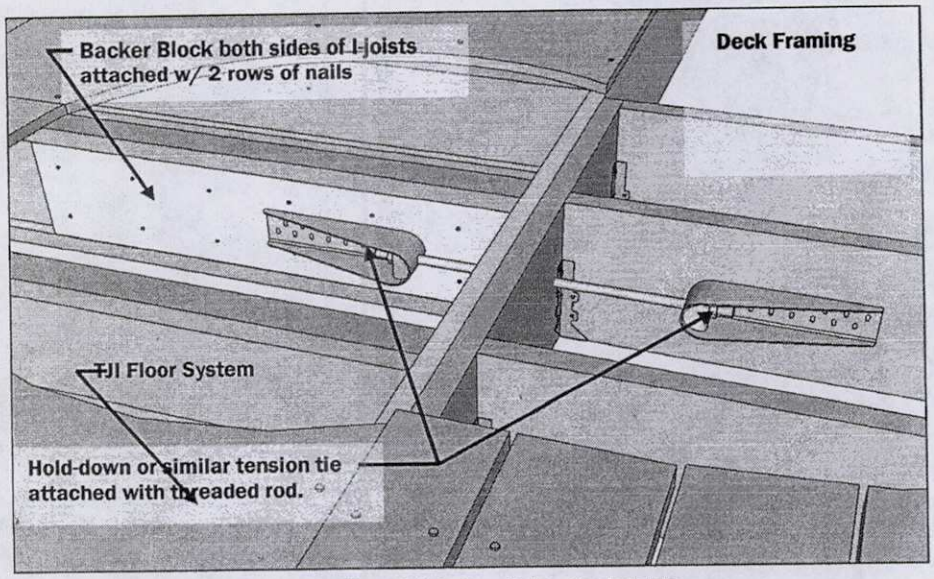

Figure 2: Hold-down Attached to Floor Joists Parallel to Deck Joists

RECEIVED
MAY 30 2012
CODES

Weyerhaeuser, Forte, Javelin, Microllam, Parallam, Silent Floor, TimberStrand, TJI, TJ, and Trus Joist are registered trademarks and Edge, Edge Gold and TJ-Pro are trademarks of Weyerhaeuser NR. © 2011 Weyerhaeuser NR Company. All rights reserved.

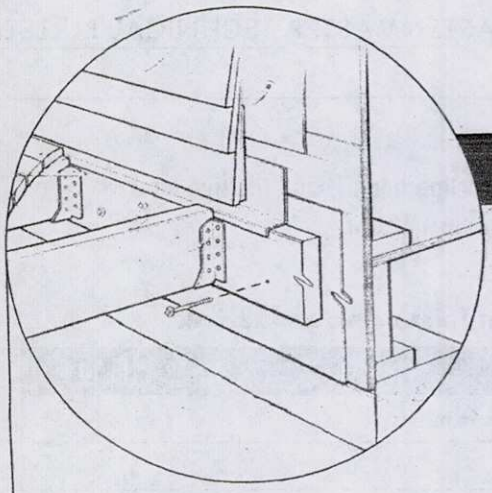

DECK LEDGER TO RIM JOIST

CONNECTION DETAILS

The LedgerLok Ledger Board Fastener has been designed specifically for attaching the deck ledger to the rim joist of the house in a code compliant manner.

2009 IRC Code Reference: 502.2.2.2 – Alternate Deck Ledger Connections

As stated in this IRC section, deck ledger connections can be designed in accordance with accepted engineering practices. Using tested and approved values as published in ICC-ES Report #1078, the LedgerLok can be used to meet this code requirement. In addition, the proprietary coating on this fastener exceeds the corrosion resistance of code approved hot-dipped galvanized coatings.

FastenMaster LedgerLok LEDGER BOARD FASTENER

INSTALLATION PROCEDURES

- Choose 3⅝" or 5" LedgerLok so that threads fully engage the rim material and fastener tip extends beyond the inside face of the rim joist.
- Use a high torque, ½" variable speed drill (18V if cordless).
- Follow the minimum spacing and fastening patterns from Figure 1 and Table 1.
- Install fasteners through the ledger and sheathing. Continue into the rim joist until the washer head is drawn firm and flush to the ledger board. Do not overdrive.

CORROSION STATEMENT

LedgerLok has been tested and is approved for use in above ground (.25 pcf) and ground contact (.40 pcf) ACQ treated wood applications.

Under the recently adopted ICC standard (AC257 – Acceptance Criteria for Corrosion-Resistant Fasteners and Evaluation of Corrosion Effects of Wood Treatment Chemicals), the proprietary coating on this fastener has been tested and found to exceed the corrosion protection offered by code compliant hot-dipped galvanized (HDG) coatings. Under the "Alternative Materials" provision of the code (IRC & IBC, Section 104.11), inspecting agencies and specifying design professionals may use the results of this test report to show equivalency of the LedgerLok coating to the approved HDG coatings, thereby meeting code.

For applications within 1,000 feet of saltwater, we recommend the use of a stainless steel fastener.

SPACING REQUIREMENTS

Fasteners should be staggered in a "W" pattern and spaced as follows:

A. Minimum end distance = 3¾"

B. Minimum edge distance = 1¾"

C. On-center spacing = Per Table 1

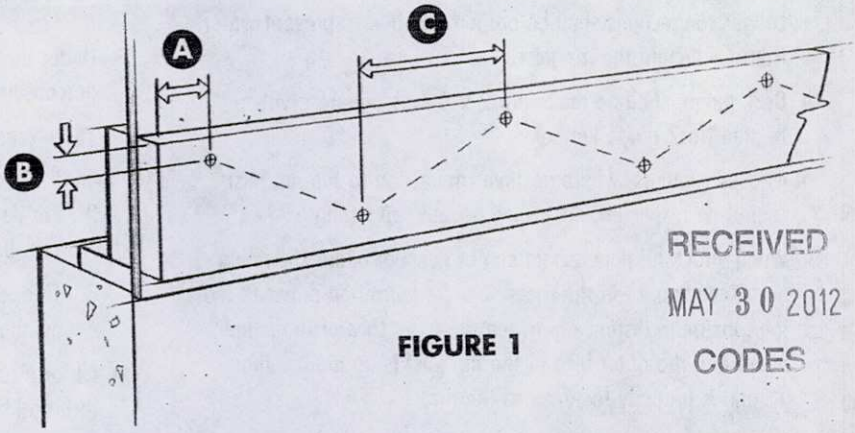

FIGURE 1

RECEIVED
MAY 30 2012
CODES

TOWNSHIP OF CALN
253 MUNICIPAL DR
THORNDALE, PA. 19372
610/384-0600

24 hrs. notice required for inspection scheduling

INSPECTION ASSIGNMENT SHEET

Building Permit No. 2012-00070-BUI

Location 3313 ALYDAR RD, DOWNINGTOWN, PA 18335

Owner ROHALL, ROGER M. & MARCIA H.

Contractor SUNRISE DECKS PA. LIC. #025626 (717-529-6719 X2)

Description DECK - SEE COPY OF PERMIT REVIEW LETTER ATTACHED

Comments SEE COPY OF PERMIT REVIEW LETTER ATTACHED

SITE INSPECTION PRIOR TO BEGINNING CONSTRUCTION

FORM INSPECTION PRIOR TO POURING FOOTERS

ROUGH FRAMING INSPECTION PRIOR TO INSULATION OR INTERIOR COVERING (rough elec

FINAL INSPECTION (performed after work is complete and PRIOR TO USING OR OCCUPYING CO

CALN TOWNSHIP
DEPARTMENT OF CODE ENFORCEMENT
Andrew F. Reczek, Director of Code Enforcement
Stephen L. Miller, Code Official / Fire Marshal
Raymond Stackhouse, Code Official / Deputy Fire Marshal
Joseph Arvay, Code Official / Housing Inspector
610.384.0600 fax: 610.384.0689 Email: andyr@calntownship.org
253 Municipal Drive, P.O. Box 72149 Thorndale, Pa 19372-0149
www.calntownship.org

April 17, 2012

Roger Rohall
3313 Alydar Rd
Downingtown, PA 19335

PERMIT REVIEW: Building Permit / Accessory Deck (240 sq.ft)

1. All work shall comply with the 2009 International Residential Code and the Caln Township Zoning Code.

2. Deck structure shall maintain the minimum 20' rear yard setback in accordance with Sections 155-56 D and 155-116 A (5).

3. All new deck footings shall be placed on firm and stable soils at a minimum depth of 36" below grade. Attachment shall be provided at the connection between post and footing to prevent uplift.

4. (2) 2" x10" beam is permitted to span a maximum 7' in accordance with Table R502.5 (2). Bearing and attachment shall be provided at each supporting post.

5. 2" x 10" floor joists, SPF #2, 16" on center shall be limited to 15'5"; Joist cantilevers shall not exceed 2'. Adequate bearing shall be provided for all joist members. Joist hangers shall be provided as required for bearing

6. **Ledger shall be connected to the primary structure's 2" nominal band board or 1" x 9 ½" Douglas Fir Laminated veneer lumber using ½" lag screws or bolts spaced a minimum of 12" on center, staggered. Lag screws / bolts shall not be placed within 2" of the top or bottom of the ledger board. Tip shall fully extend through the inside face of the band joist (INSPECTION REQUIRED)**

7. **Two 1,500 lb. Hold Downs shall be installed to control lateral movement in accordance with R502.2.2.2**

8. Composite decking shall be installed in accordance with the manufacture's specification.

9. Flashing shall be provided at the connection between ledger board and the main structure.

10. **Riser heights at exterior doors shall not exceed 7 ¾"**

11. **Stair risers shall not exceed 8 ¼ " in height, Tread depths shall not be less than 9". All risers shall be enclosed and shall not differ in height more than 3/8"**

12. **Guard railings are required on all raised surfaces (decks, ramps or patios) 30" or greater above grade and on all open sides of stairways with 4 or more risers. Guard Railings shall be a minimum 36" in height and be capable of preventing the passage of a 4" sphere. Guards shall support a 200 lb. lateral load at any point along the top rail.**

13. **A graspable hand railing is required on at least one side of stairs with 4 or more risers. Hand railings shall be 34" – 38" above the stair nosing.**

14. **Stairway illumination shall be provided to all stair treads in accordance with Section R303.6**

15. Contractors shall be properly registered with the Commonwealth of Pennsylvania Attorney General's office

16. **Inspections shall be scheduled allowing a minimum of 24-hr notice by calling 610-384-0600. Required inspections include; 1) Site, 2) Footings prior to pour, 3) Rough Framing, 4) Final**

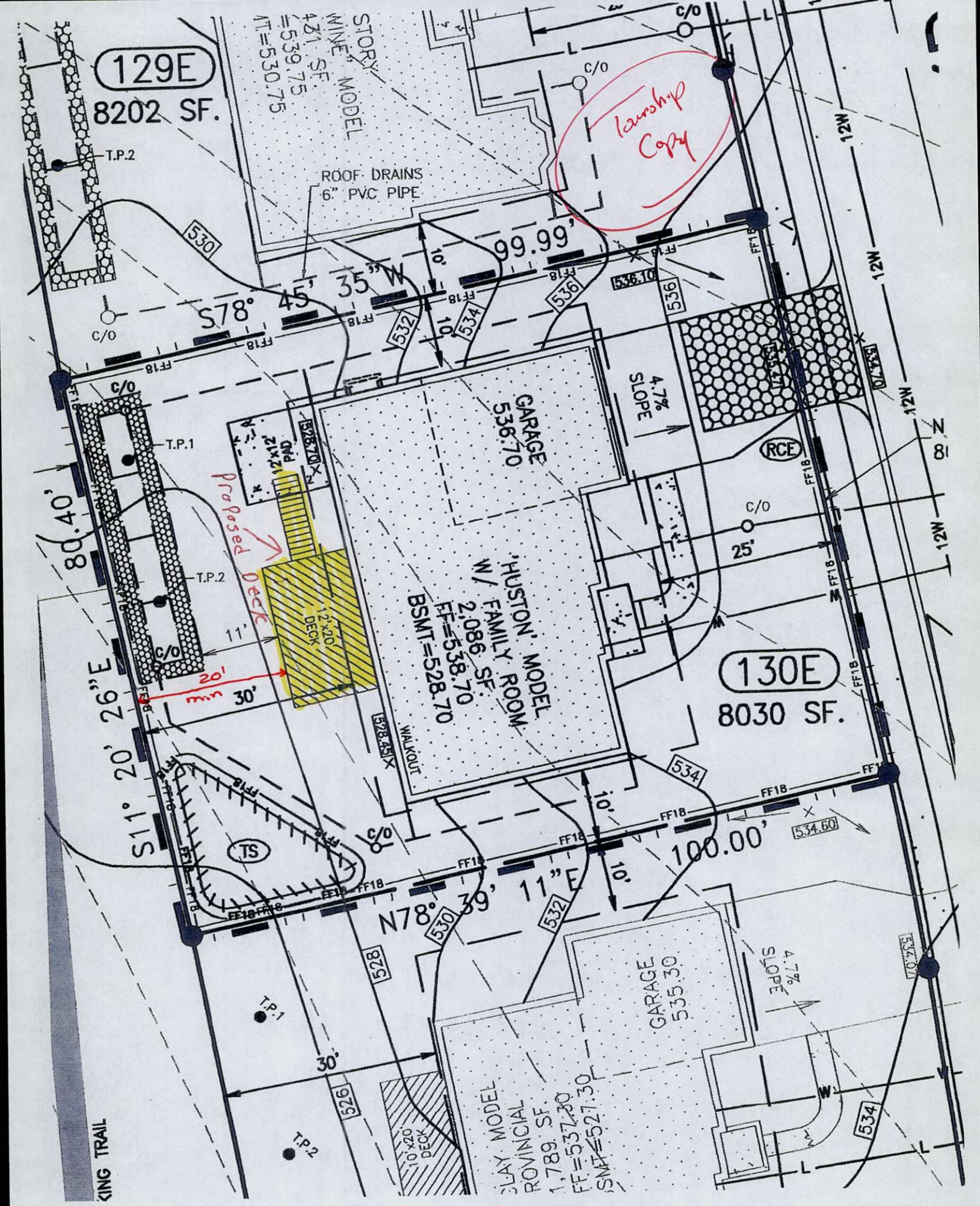
129E
8202 SF.
130E
8030 SF.
ROOF DRAINS
6" PVC PIPE
Township Copy
S78° 45' 35"W
99.99'
N78° 39' 11"E
100.00'
S11° 20' 26"E
80.40'
GARAGE
536.70
GARAGE
535.30
4.7% SLOPE
'HUSTON' MODEL
W/ FAMILY ROOM
2,086 SF.
FF=538.70
BSMT=528.70
12'x12' PAD
12'x20' DECK
10'x20' DECK
Proposed Deck
20' min
WALKOUT
T.P.1
T.P.2
C/O
RCE
TS
12W
FF18
530
532
534
536
528
526
10'
11'
30'
25'
536.10
534.60
534.70
528.70
528.45
KING TRAIL

Job Name = Roger Rohall
3313 Alydar Rd.
Downingtown Pa 19335

Framing Plan
scale = 1/4" = 1'
Page = 1 of 2

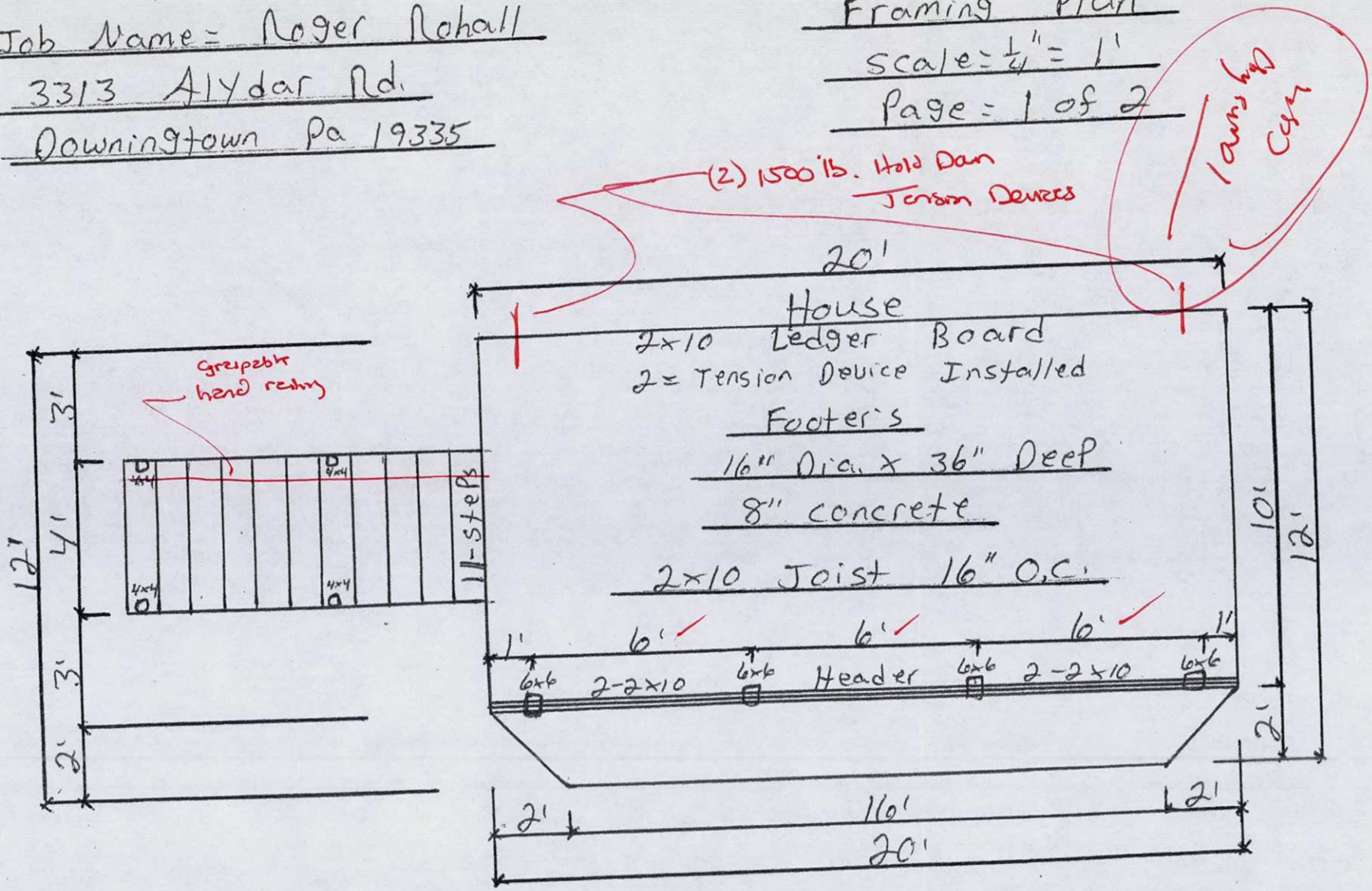

Drawn by = Ammon Stoltzfus
License # PA-025626

Date = 3-28-12

Job Name = Roger Rohall
3313 Alydar Rd.
Downingtown Pa 19335

Decking & Railing Plan
scale = 1/4" = 1'
Page = 2 of 2

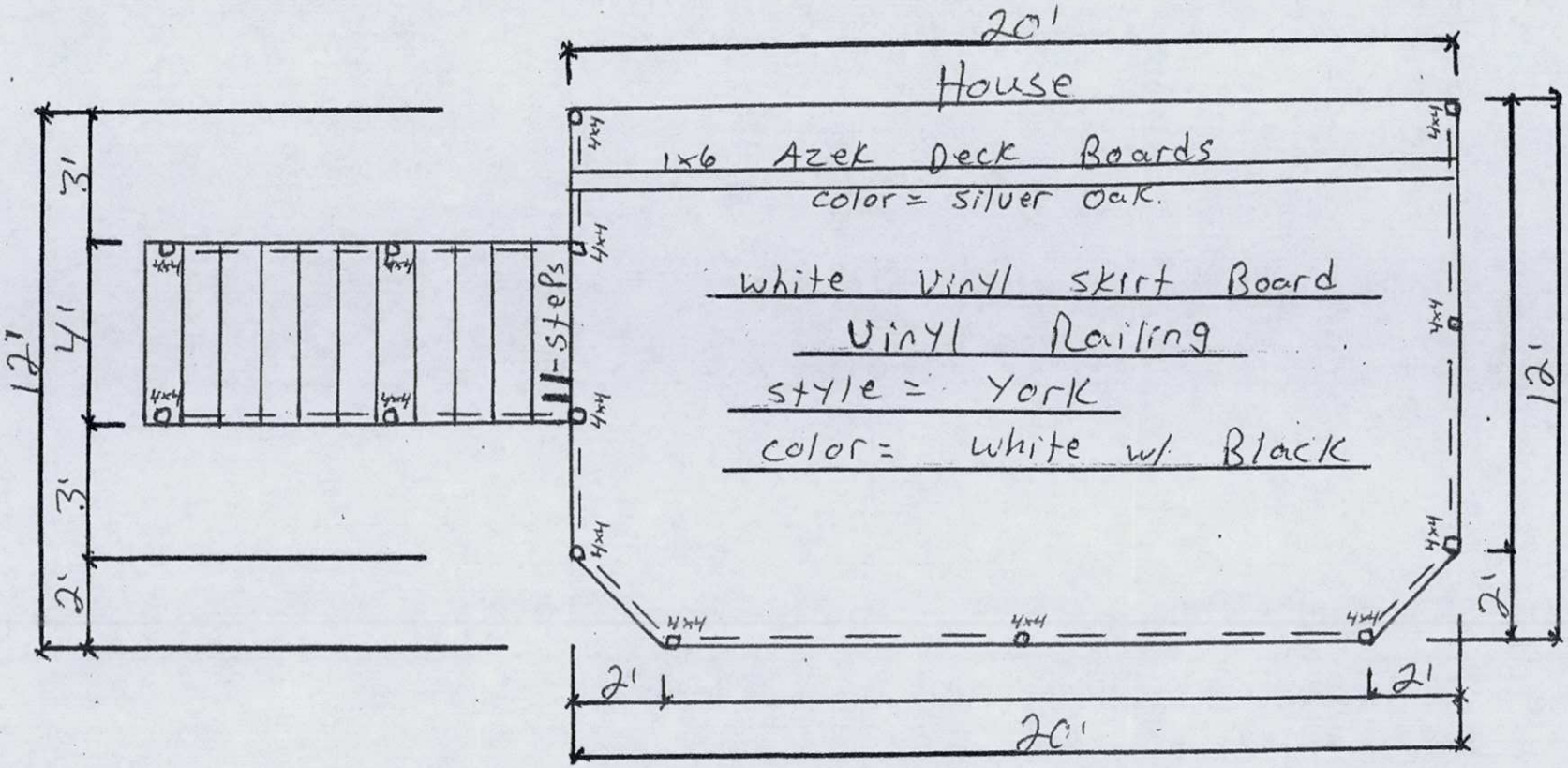

Drawn by = Ammon Stoltzfus
License # PA-025626

Date = 3-28-12

(Spec Sheet for SunRise Decks)

Vinyl Flashing Behind Ledger Board

2x 10 Ledger Board

$\frac{1}{2}$" x $3\frac{1}{2}$" Lags 12" o.c. staggered

2x 10 Joist Hangers Fasten w/ $1\frac{1}{2}$" Nails

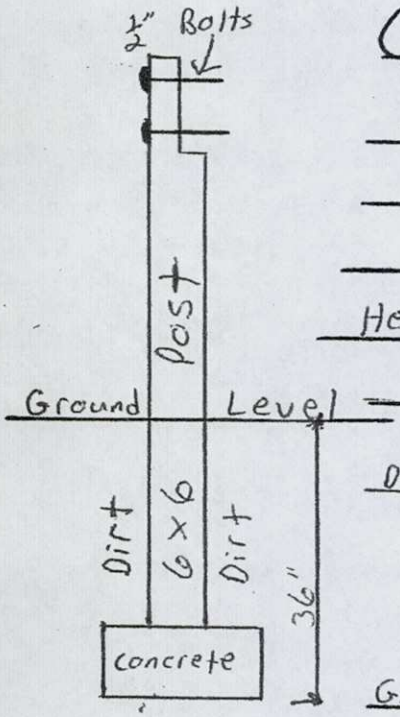

(Post + Header Detail)

Dig 15" Dia. Hole = 36" Deep

8" concrete

6x6 Post Notch For Header

Header = 2 - 2x10's Nailed Together And Bolted to 6x6 Post w/ $\frac{1}{2}$" Bolts

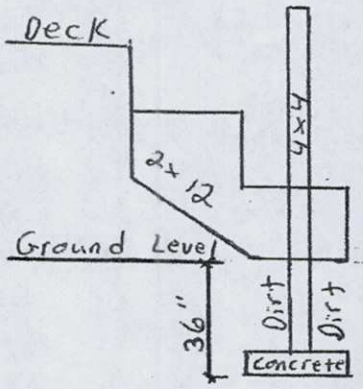

(Step Design)

7" Riser = close w/ $\frac{3}{4}$" Board

11" Tread = $\frac{5}{4}$ Decking

stringers 16" o.c.

Railing Post to be Fasten to Face Board w/ $\frac{1}{2}$" Bolts

All Joist Hangers + Fasteners Hot Dip Galv.

All Framing to be Pressure Treated Yellow Pine

Vinyl Railing

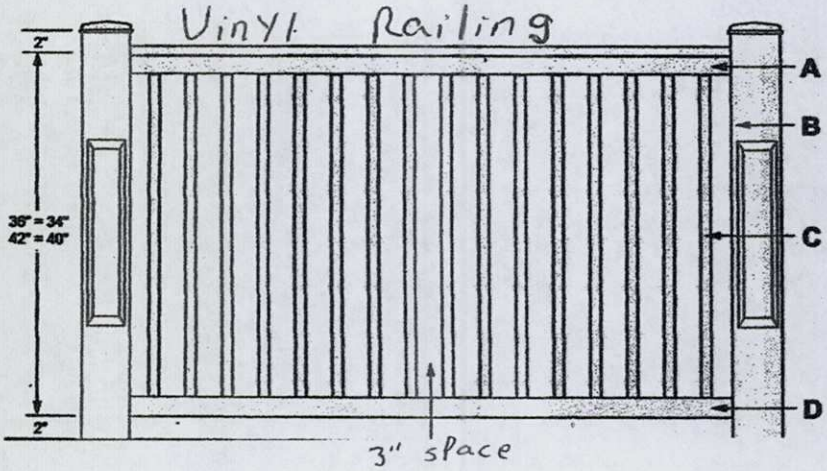

A - Top Rail
(With Aluminum Channel)

B - Plain Posts (4" x 4") or
Recessed Panel Posts (5" x 5")
36" High = 38" Long Posts
42" High = 44" Long Posts

C - 1.3" x 1.3" Balusters
36" High = 31" Balusters
42" High = 37" Balusters

D - Bottom Rail

Meets ICC Code Standards

CALN TOWNSHIP
253 Municipal Drive, Thorndale, PA 19372
610/384-0600, Fax – 610/384-0689
BUILDING PERMIT APPLICATION – PERMIT FEES ARE NON-REFUNDABLE
Minimum fee due at time of permit application

Address 3313 Aldar Rd **Subdivision** _____ **Lot #** _____ **Zoning Dist.** R3

Building Improvement
- New Building ☐
- Addition ☐
- Alteration ☐
- Basement ☐
- Deck /Ramp ☒
- Demolition ☐
- Driveway ☐

Fire Protection
- Sprinkler/Alarm ☐
- Hot Tub ☐
- Tenant fit-out ☐
- Mechanical ☐
- Plumbing ☐
- Pool ☐
- Roof ☐
- Shed (>1000 sq. ft.) ☐
- Tank ☐
- Other ☐

IDENTIFICATION – To be completed by all applicants
OWNER
Name: Roger Rohall
Address: 3313 Aldar Rd.
Downingtown Pa 19335
Phone #:

Contractor Information: Effective 7/1/09 State Cert. number required. PA-025626
Name: Ammon Stoltzfus
Sunrise Decks
Address: 114 Morrison Mill Rd
Kirkwood Pa 17536
Phone #: 717-529-6719

Residential ☒ Location: _____
Commercial ☐ Location: _____

Residential Building Area:
# of Stories _____
Basement _____
Garage _____
1st. Floor _____
2nd. Floor _____
Total ~~Habitable~~ Deck Space 240 sq ft

Commercial Projects:
Use Group
Classification _____
Occupancy Load _____
Sprinklered ☐ Yes ☐ No

Submit floor plan showing Location w/clearances & material types /Mechanical
Central AC? Yes ☐ No ☐
Will there be an Elevator? Yes ☐ No ☐

Type of Heating Fuel
- Gas ☐
- Oil ☐
- Electric ☐
- Coal ☐
- Other ☐

Lot Area _____ sq.ft.
Building Coverage _____ sq.ft.
Total Impervious Coverage _____ sq.ft.

DATE: 3-31-12
Job Cost: 7,000.00

Sewage Disposal
Public ☐ Private ☐

Water Supply
Public ☐ Private

Type of Construction
IA ☐ IB ☐
IIA ☐ IIB ☐
IIIA ☐ IIIB ☐
IV ☐
VA ☐ VB ☐

Site located in Flood Area
Yes ☐ No

Residential Bldg. Only
Bedrooms _____
Bathrooms _____

Residential Bldg. Only
Bedrooms _____
Bathrooms

 # Off Street Parking Spaces. _____

SIGNATURE OF APPLICANT: Ammon Stoltzfus DATE: 3-31-12

DESCRIPTION /COMMERCIAL ACTIVITIES _____

DO NOT WRITE IN THIS SPACE – FOR OFFICE USE ONLY

Permit # 70 | Approved By: [signature] | Permit Fee: $120.00 | Date Issued: 4/17/2012

REMARKS: See attached Review Comments

TOWNSHIP OF CALN

PERMIT

Permit No: 2012-00070-BUI

Date Issued: 4/17/2012

Location of Work: 3313 ALYDAR RD

Type of Work: DECK - SEE COPY OF PERMIT REVIEW LETTER ATTACHED

Owner: ROHALL, ROGER M. & MARCIA H.

Contractor: SUNRISE DECKS PA. LIC. #025626

Parcel #:

BUILDING CODE OFFICIAL

THIS PLACARD MUST BE POSTED IN A CONSPICUOUS PLACE ON THE PREMISES, EASILY VISIBLE FROM THE PRINCIPAL STREET, WELL SECURED IF EXPOSED TO THE WEATHER, DURING THE ENTIRE CONSTRUCTION TIME.

WORK MUST BE STARTEDWITHIN 6 MONTHS FROM DATE OF ISSUE

Commonwealth of Pennsylvania

Office of Attorney General

THIS IS TO CERTIFY THAT

Sunrise Decks
76 Morrison Mill Rd
Kirkwood, PA 17536-9718

HAS REGISTERED IN PENNSYLVANIA AS A HOME IMPROVEMENT CONTRACTOR

7/1/2013
VALID UNTIL

PA025626
REGISTRATION NUMBER

Ammon K Stoltzfus
SIGNATURE OF REGISTRATION CERTIFICATE HOLDER

Linda J. Williams
LINDA J. WILLIAMS, CHIEF DEPUTY ATTORNEY GENERAL

ACORD®

CERTIFICATE OF LIABILITY INSURANCE

DATE (MM/DD/YYYY): 12/29/2011

THIS CERTIFICATE IS ISSUED AS A MATTER OF INFORMATION ONLY AND CONFERS NO RIGHTS UPON THE CERTIFICATE HOLDER. THIS CERTIFICATE DOES NOT AFFIRMATIVELY OR NEGATIVELY AMEND, EXTEND OR ALTER THE COVERAGE AFFORDED BY THE POLICIES BELOW. THIS CERTIFICATE OF INSURANCE DOES NOT CONSTITUTE A CONTRACT BETWEEN THE ISSUING INSURER(S), AUTHORIZED REPRESENTATIVE OR PRODUCER, AND THE CERTIFICATE HOLDER.

IMPORTANT: If the certificate holder is an ADDITIONAL INSURED, the policy(ies) must be endorsed. If SUBROGATION IS WAIVED, subject to the terms and conditions of the policy, certain policies may require an endorsement. A statement on this certificate does not confer rights to the certificate holder in lieu of such endorsement(s).

PRODUCER
Avis Insurance
3399 Jetstar Drive
Lititz PA 17543

CONTACT NAME: Angie Haldeman
PHONE (A/C, No, Ext): (717) 625-3770. FAX (A/C, No): (717) 625-3777
E-MAIL ADDRESS: ahaldeman@avisinsurance.com

INSURER(S) AFFORDING COVERAGE	NAIC #
INSURER A: Mutual Benefit Insurance Co	14664
INSURER B:	
INSURER C:	
INSURER D:	
INSURER E:	
INSURER F:	

INSURED
Ammon Stoltzfus, DBA: Sunrise Decks
114 Morrison Mill Rd.
Kirkwood PA 17536

COVERAGES CERTIFICATE NUMBER: 2012-2013 REVISION NUMBER:

THIS IS TO CERTIFY THAT THE POLICIES OF INSURANCE LISTED BELOW HAVE BEEN ISSUED TO THE INSURED NAMED ABOVE FOR THE POLICY PERIOD INDICATED. NOTWITHSTANDING ANY REQUIREMENT, TERM OR CONDITION OF ANY CONTRACT OR OTHER DOCUMENT WITH RESPECT TO WHICH THIS CERTIFICATE MAY BE ISSUED OR MAY PERTAIN, THE INSURANCE AFFORDED BY THE POLICIES DESCRIBED HEREIN IS SUBJECT TO ALL THE TERMS, EXCLUSIONS AND CONDITIONS OF SUCH POLICIES. LIMITS SHOWN MAY HAVE BEEN REDUCED BY PAID CLAIMS.

INSR LTR	TYPE OF INSURANCE	ADDL INSR	SUBR WVD	POLICY NUMBER	POLICY EFF (MM/DD/YYYY)	POLICY EXP (MM/DD/YYYY)	LIMITS	
A	GENERAL LIABILITY X COMMERCIAL GENERAL LIABILITY CLAIMS-MADE X OCCUR GEN'L AGGREGATE LIMIT APPLIES PER: X POLICY PRO-JECT LOC			AC921990	1/1/2012	1/1/2013	EACH OCCURRENCE	$ 1,000,000
							DAMAGE TO RENTED PREMISES (Ea occurrence)	$ 100,000
							MED EXP (Any one person)	$ 5,000
							PERSONAL & ADV INJURY	$ 1,000,000
							GENERAL AGGREGATE	$ 2,000,000
							PRODUCTS - COMP/OP AGG	$ 2,000,000
								$
	AUTOMOBILE LIABILITY ANY AUTO ALL OWNED AUTOS SCHEDULED AUTOS HIRED AUTOS NON-OWNED AUTOS						COMBINED SINGLE LIMIT (Ea accident)	$
							BODILY INJURY (Per person)	$
							BODILY INJURY (Per accident)	$
							PROPERTY DAMAGE (Per accident)	$
								$
	UMBRELLA LIAB OCCUR EXCESS LIAB CLAIMS-MADE DED RETENTION $						EACH OCCURRENCE	$
							AGGREGATE	$
								$
A	WORKERS COMPENSATION AND EMPLOYERS' LIABILITY ANY PROPRIETOR/PARTNER/EXECUTIVE OFFICER/MEMBER EXCLUDED? Y/N (Mandatory in NH) If yes, describe under DESCRIPTION OF OPERATIONS below		N/A	WC921990	1/1/2012	1/1/2013	X WC STATU-TORY LIMITS OTH-ER	
							E.L. EACH ACCIDENT	$ 100,000
							E.L. DISEASE - EA EMPLOYEE	$ 100,000
							E.L. DISEASE - POLICY LIMIT	$ 500,000

DESCRIPTION OF OPERATIONS / LOCATIONS / VEHICLES (Attach ACORD 101, Additional Remarks Schedule, if more space is required)

CERTIFICATE HOLDER

Sunrise Decks
114 Morrison Mill Road
Kirkwood, PA 17536

CANCELLATION

SHOULD ANY OF THE ABOVE DESCRIBED POLICIES BE CANCELLED BEFORE THE EXPIRATION DATE THEREOF, NOTICE WILL BE DELIVERED IN ACCORDANCE WITH THE POLICY PROVISIONS.

AUTHORIZED REPRESENTATIVE

Craig Robertson/HALD

TOWNSHIP OF CALN
253 MUNICIPAL DR
THORNDALE, PA. 19372
610-384-0600

CERTIFICATE OF OCCUPANCY

Building Permit No.: 13-00149

Zoning District: R-3

Permission is hereby given:

NGUYEN NHAN PHAN THU
(owner of use)

owner (new)

KING DECKS
contractor

Use Type: R RESIDENTIAL

(Lot & Development)

REMARKS

At: 3353 ALYDAR RD

Description: RESIDENTIAL ACCESSORY STRUCTURE - DECK

6/6/13
Building Inspector DATE

Zoning Officer/Building Code Official DATE

APPROVED AS TO COMPLIANCE
WITH ZONING ORDINANCE.

IN COMPLIANCE WITH 2009 IBC CODE

SCANNED
JUN 7 - 2013
ELECTRONICALLY FILED

Complete
5/30/13
SW
OK

FIELD CORRECTION NOTICE

LOCATION 3353 Alydar Rd PERMIT NO. See File U&O

ISSUED TO Nguyen
PERMIT HOLDER AND/OR ALL RESPONSIBILE PARTIES.

NOTICE DELIVERED TO Via Phone Message to Contractor

Upon inspection, violations of the _____ Sec. _____ were in evidence.

The following orders are hereby issued for their correction: _____

1. Move Gusset mechanical Connection to upper thru Bolt
2. Lateral Bracing
3. Middle Stringers Unsupported

PLEASE CALL FOR INSPECTION WHEN CORRECTIONS HAVE BEEN COMPLETED. ACCEPTANCE AND APPROVAL BY AN INSPECTOR OF THIS DEPARTMENT IS REQUIRED. ALL CORRECTIONS MUST BE MADE ON OR BEFORE U&O.

DATE 5/3/13 BY SW
INSPECTOR

ORIGINAL

CALN TOWNSHIP

DEPARTMENT OF CODE ENFORCEMENT

Andrew F. Reczek, Director of Code Enforcement
Stephen L. Miller, Code Official / Fire Marshal
Raymond Stackhouse, Code Official / Deputy Fire Marshal
Joseph Arvay, Property Maintenance / Housing Inspector

www.calntownship.org

Phone: 610-384-0600 Ext. 145 Fax: 610-384-0689
Email: smiller@calntownship.org
253 Municipal Drive, P.O. Box 72149 Thorndale, Pa. 19372-0149

MISCELLANEOUS INSPECTION REPORT

DATE: 5/3/13

LOCATION: 3353 Alydar Rd

OK

TYPE OF INSPECTION: Deck Final

- 6x6 posts Notched for Beam
- Double 2x10 Beams, Set in post notch & Thru Bolted.
- 2x8 Joists, 16" o.c., on Hangers at Ledger, Mechanically connected to Beam.
- 2x8 Ledger, Properly Lagged, Bolt controls in place x2
- Decking ok
- Guard ok Except what is noted on FCN
- Steps & graspable Rail ok Except what is noted on FCN

* P/U needed

CALN TOWNSHIP

DEPARTMENT OF CODE ENFORCEMENT

Andrew F. Reczek, Director of Code Enforcement
Stephen L. Miller, Code Official / Fire Marshal
Raymond Stackhouse, Code Official / Deputy Fire Marshal
Joseph Arvay, Property Maintenance / Housing Inspector

www.calntownship.org

Phone: 610-384-0600 Ext. 145 Fax: 610-384-0689
Email: smiller@calntownship.org
253 Municipal Drive, P.O. Box 72149 Thorndale, Pa. 19372-0149

MISCELLANEOUS INSPECTION REPORT

DATE: 4/29/13 SM OK

LOCATION: 3353 Aldor Road

TYPE OF INSPECTION: Deck Site & Footers

- (4) pier Footers, 6' O.S., 14" x 36", Firm / Dry / unyielding soil
- Site ok, 20' Rear yard provided.

SM

TOWNSHIP OF CALN
253 MUNICIPAL DR
THORNDALE, PA. 19372
610/384-0600

24 hrs. notice required for inspection scheduling

INSPECTION ASSIGNMENT SHEET

Building Permit No. 13-00149

Location 3353 ALYDAR RD., DOWNINGTOWN, PA

Owner NGUYEN, NHAN, PHAN THU

Contractor KING DECKS

Description DECK

Comments SEE COPY OF PERMIT REVIEW LETTER ATTACHED

SITE INSPECTION PRIOR TO BEGINNING CONSTRUCTION

FORM INSPECTION PRIOR TO POURING FOOTERS

ROUGH FRAMING INSPECTION PRIOR TO INSULATION OR INTERIOR COVERING (rough elec

FINAL INSPECTION (performed after work is complete and PRIOR TO USING OR OCCUPYING CO

CALN TOWNSHIP
DEPARTMENT OF CODE ENFORCEMENT
Andrew F. Reczek, Director of Code Enforcement
Stephen L. Miller, Code Official / Fire Marshal
Raymond Stackhouse, Code Official / Deputy Fire Marshal
Joseph Arvay, Code Official / Housing Inspector
610.384.0600 fax: 610.384.0689 Email: andyr@calntownship.org
253 Municipal Drive, P.O. Box 72149 Thorndale, Pa 19372-0149
www.calntownship.org

March 15, 2013

Nhan Nguyen & Thu Phan
3353 Alydar Rd.
Downingtown, PA 19335

PERMIT REVIEW: Building Permit / Accessory Deck (200 sq.ft)

1. All work shall comply with the 2009 International Residential Code and the Caln Township Zoning Code.
2. **Deck structure shall maintain the minimum 20' rear yard setback in accordance with Sections 155-56 D and 155-116 A (5).**
3. All new deck footings shall be placed on firm and stable soils at a minimum depth of 36" below grade. Attachment shall be provided at the connection between post and footing to prevent uplift.
4. **(2) 2" x10" beam is permitted to span a maximum 7'0" in accordance with Table R502.5 (2). Additional footings shall be provided in accordance with our revised plan notes. Bearing and attachment shall be provided at each supporting post.**
5. 2" x 10" floor joists, SPF #2, 16" on center shall be limited to 15'5"; Joist cantilevers shall not exceed 2'. Adequate bearing shall be provided for all joist members. Joist hangers shall be provided as required for bearing
6. **Ledger shall be connected to the primary structure's 2" nominal band board or 1" x 9 ½" Douglas Fir Laminated veneer lumber using ½" lag screws or bolts spaced a minimum of 11" on center, staggered. Lag screws / bolts shall not be placed within 2" of the top or bottom of the ledger board. Tip shall fully extend through the inside face of the band joist (INSPECTION REQUIRED)**
7. **Two 1,500 lb. Hold Downs shall be installed to control lateral movement in accordance with R502.2.2.2**
8. Composite decking shall be installed in accordance with the manufacture's specification.
9. Flashing shall be provided at the connection between ledger board and the main structure.
10. **Riser heights at exterior doors shall not exceed 7 ¾"**
11. **Stair risers shall not exceed 8 ¼ " in height, Tread depths shall not be less than 9". All risers shall be enclosed and shall not differ in height more than 3/8"**
12. **Guard railings are required on all raised surfaces (decks, ramps or patios) 30" or greater above grade and on all open sides of stairways with 4 or more risers. Guard Railings shall be a minimum 36" in height and be capable of preventing the passage of a 4" sphere. Guards shall support a 200 lb. lateral load at any point along the top rail in accordance with the American Wood Council detail attached**
13. **A graspable hand railing is required on at least one side of stairs with 4 or more risers. Hand railings shall be 34" – 38" above the stair nosing.**
14. **Stairway illumination shall be provided to all stair treads in accordance with Section R303.6**
15. Contractors shall be properly registered with the Commonwealth of Pennsylvania Attorney General's office
16. **Inspections shall be scheduled allowing a minimum of 24-hr notice by calling 610-384-0600. Required inspections include; 1) Site, 2) Footings prior to pour, 3) Rough Framing, 4) Final**

GUARD POST ATTACHMENTS

Deck guard posts shall be a minimum 4x4 (nominal) with an adjusted bending design value not less than 1,100 psi.

Guard posts for guards which run parallel to the deck joists shall be attached to the outside joist per Figure 25. Guard posts for guards that run perpendicular to the deck joists shall be attached to the rim joist in accordance with Figure 26. Only hold down anchor models meeting these minimum requirements shall be used. Hold down anchors shall have a minimum allowable tension load of 1,800 pounds for a 36" maximum rail height and be installed in accordance with the manufacturer's instructions.

Figure 25. Guard Post to Outside Joist Example

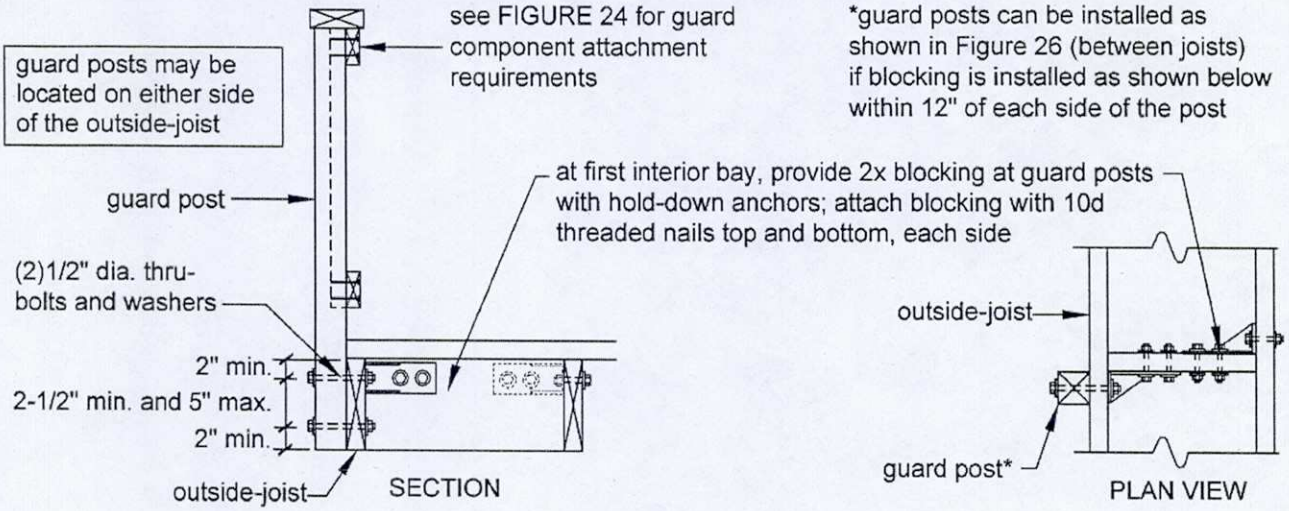

Figure 26. Guard Post to Rim Joist Example

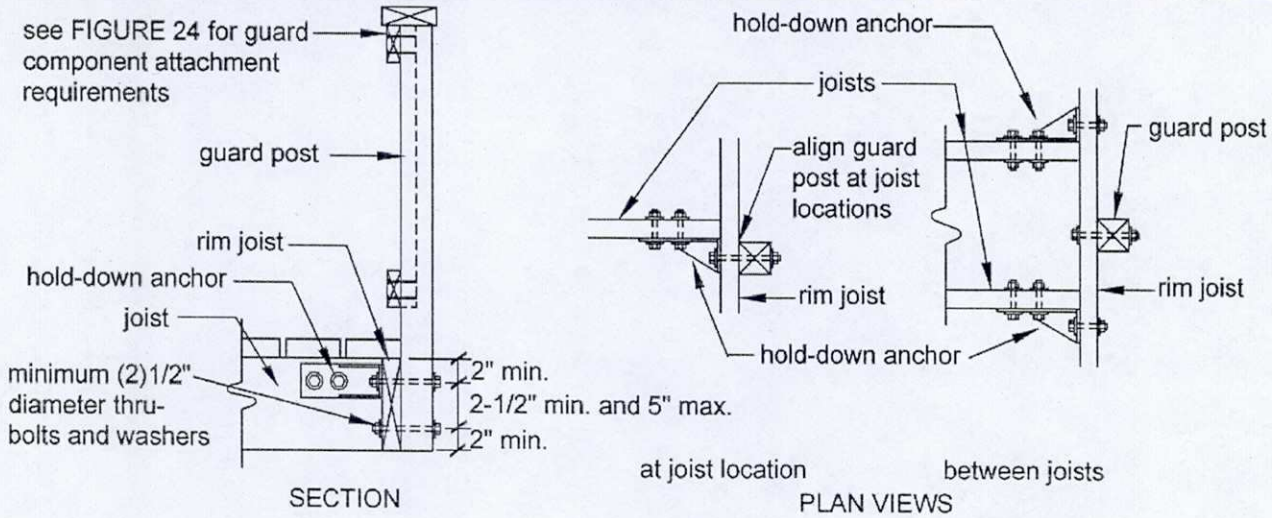

King Decks

318 Hollow RD
Quarryville PA 17566
717-806-1035

Spec Sheet

Railing 36" High
if deck Height 30" or More

All nails, bolts, etc. are
Hot dipped galvinized

Decking screws Stainless steel

Deck has 2ft cantilever over beam

2x10 Ledger board lagged to House 5/16 x 4 1/2" Ledger Lok screw 12" O.C.

Flashing behind ledger

install per AWC Detail with mechanical connector

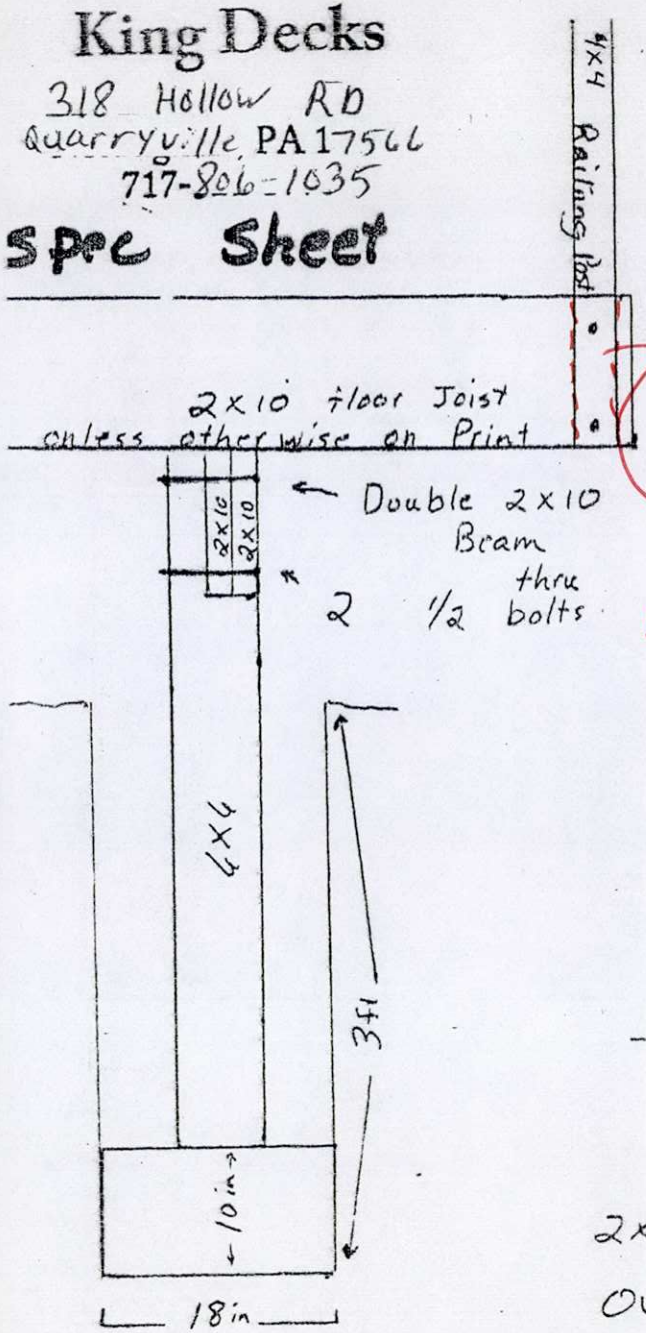

install (2) 1500 lb Hold Down Devices

Our standard stairs have
11 in tread
7in Rise

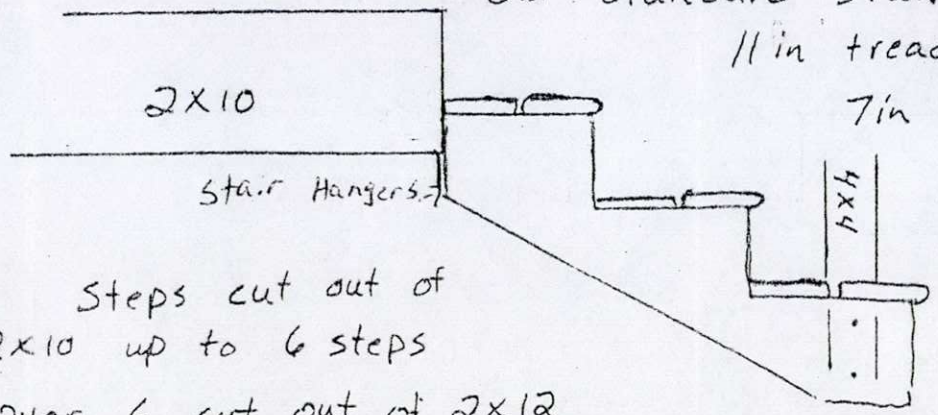

Steps cut out of
2x10 up to 6 steps
Over 6 cut out of 2x12

Stairs over 4 steps get Handrail

Job Name: Nhan Nguyen
3353 Alydar RD

Decking & Railing Plan
Scale = 1/4 = 1'

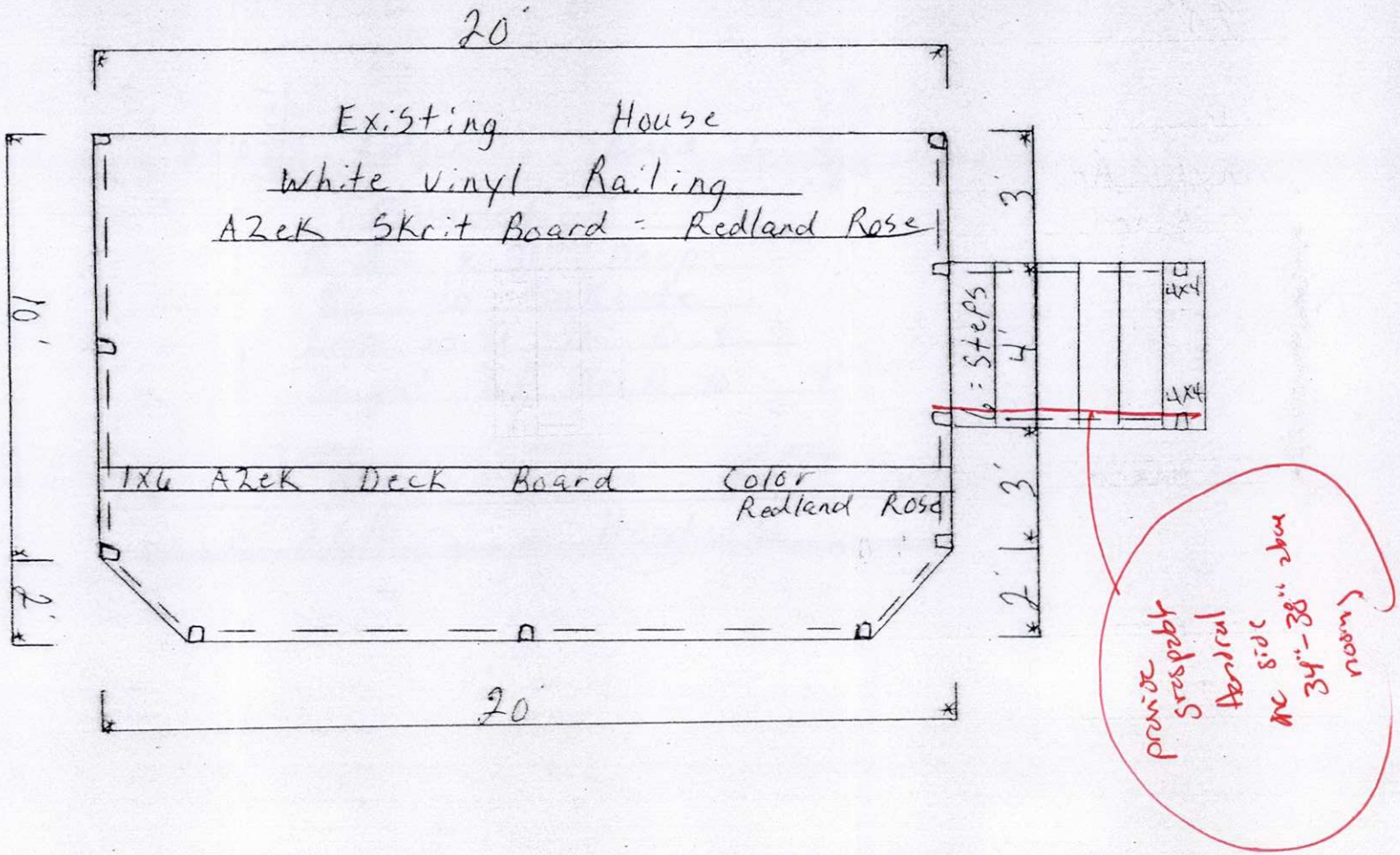

SAMPLE PLOT PLAN

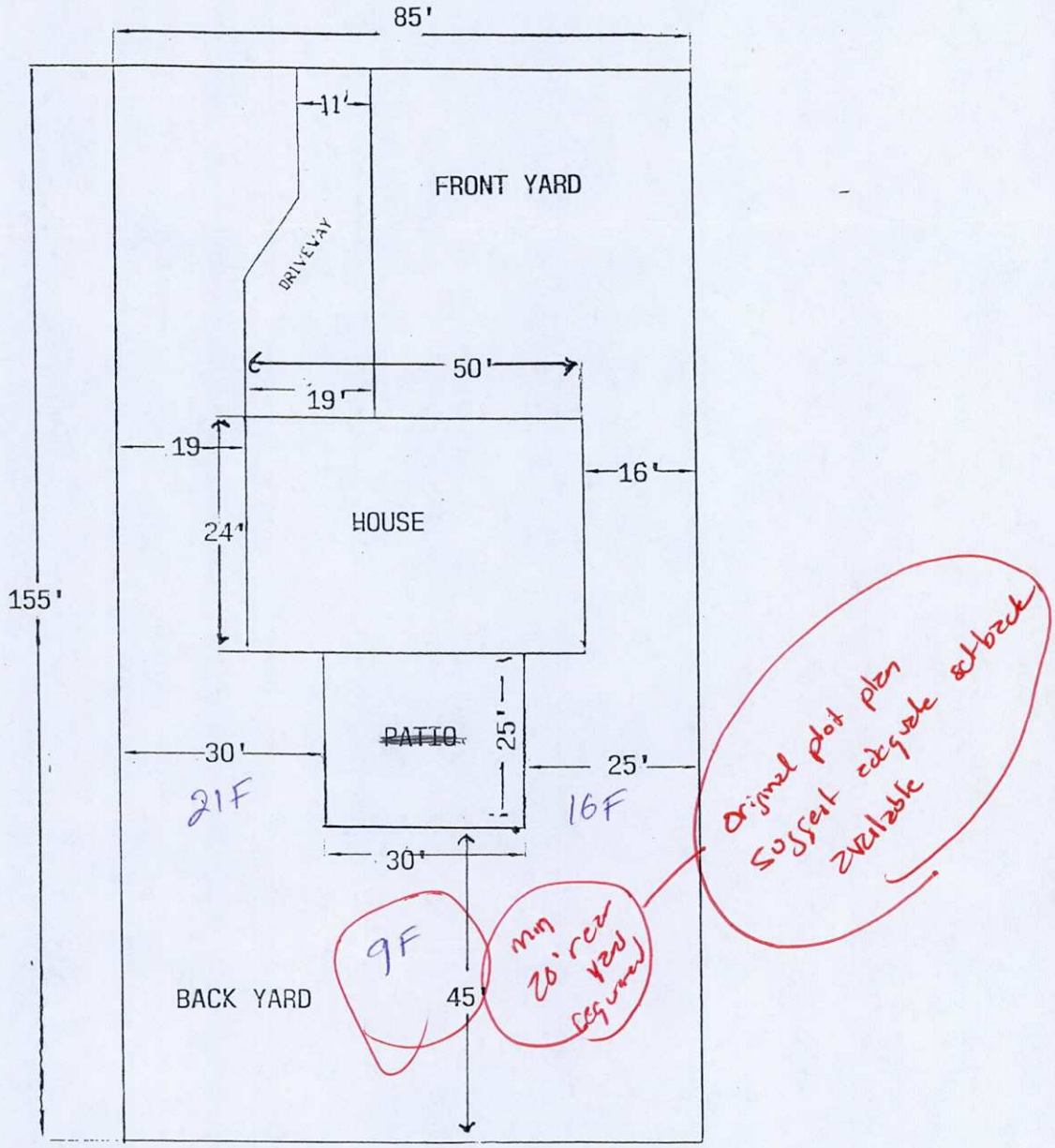

Plot Plans must include all structures (house, driveway, decks, patios, sheds, pools and any other structures that may be present) including the dimensions of said structures. Plot plan must also show setback distances to all property lines.

CALN TOWNSHIP
253 Municipal Drive, Thorndale, PA 19372
610/384-0600, Fax – 610/384-0689
BUILDING PERMIT APPLICATION – PERMIT FEES ARE NON-REFUNDABLE
Minimum fee due at time of permit application

Address _____ **Subdivision** _____ **Lot #** 103 **Zoning Dist.** R-3

Building Improvement
- New Building ☐
- Addition ☐
- Alteration ☐
- Basement ☐
- Deck /Ramp 200 sq.ft ☑
- Demolition ☐
- Driveway ☐

Fire Protection
- Sprinkler/Alarm ☐
- Hot Tub ☐
- Tenant fit-out ☐
- Mechanical ☐
- Plumbing ☐
- Pool ☐
- Roof ☐
- Shed (>1000 sq. ft.) ☐
- Tank ☐
- Other ☐

IDENTIFICATION – To be completed by all applicants
OWNER
Name: Nhan Nguyen & Thu phan
Address: 3353 Alydar RD
DOWNINGTOWN, PA 19335
Phone #

Contractor Information: Effective 7/1/09 State Cert. number required. PA 073330
Name: King Decks
Address: 318 Hollow RD
Quarryville PA 17566
Phone #: (717) 806-1035

Residential ☐ Location: _____
Commercial ☐ Location: _____

DATE: _____
Job Cost: _____

Sewage Disposal
Public ☑ Private ☐

Water Supply
Public ☐ Private ☑

Type of Construction
IA ☐ IB ☐
IIA ☐ IIB ☐
IIIA ☐ IIIB ☐
IV ☐
VA ☐ VB ☐

Site located in Flood Area
Yes ☐ No (circled)

Submit floor plan showing Location w/clearances & material types /Mechanical
Central AC? Yes ☐ No ☐
Will there be an Elevator? Yes ☐ No ☐

Residential Building Area:
# of Stories _____
Basement _____
Garage _____
1st. Floor _____
2nd. Floor _____
Total Habitable Space _____

Commercial Projects:
Use Group Classification _____
Occupancy Load _____
Sprinklered ☐ Yes ☐ No

Residential Bldg. Only
Bedrooms _____
Bathrooms _____

Residential Bldg. Only
Bedrooms _____
Bathrooms _____

Type of Heating Fuel
- Gas ☑
- Oil ☐
- Electric ☐
- Coal ☐
- Other ☐

Lot Area 9148 sq.ft.
Building Coverage 2495 sq.ft.
Total Impervious Coverage _____ sq.ft.

 # Off Street Parking Spaces. _____

SIGNATURE OF APPLICANT: _____ DATE: _____

DESCRIPTION /COMMERCIAL ACTIVITIES _____

1318 **DO NOT WRITE IN THIS SPACE – FOR OFFICE USE ONLY**

Permit # 13-149	Approved By: [signature]	Permit Fee: _____	Date Issued: 3/15/2013

REMARKS:

TOWNSHIP OF CALN

PERMIT

Permit No: 13-00149

Date Issued: 03/11/13

Location of Work: 3353 ALYDAR RD

Type of Work: DECK - SEE COPY OF PERMIT REVIEW LETTER ATTACHED

Owner: NGUYEN NHAN PHAN THU

Contractor: KING DECKS

Parcel #: 39-4-774.0

BUILDING CODE OFFICIAL

THIS PLACARD MUST BE POSTED IN A CONSPICUOUS PLACE ON THE PREMISES, EASILY VISIBLE FROM THE PRINCIPAL STREET, WELL SECURED IF EXPOSED TO THE WEATHER, DURING THE ENTIRE CONSTRUCTION TIME.

WORK MUST BE STARTEDWITHIN 6 MONTHS FROM DATE OF ISSUE